Magnescale

SPEED × PRECISION

Magnescale Co., Ltd.

International Sales	: 3-1-4 Edagawa, Koto-ku, Tokyo 135-0051, Japan	TEL.+81(0)3-6632-7924	E-mail : info-mgs-eng@magnescale.com
Magnescale Americas Inc.	: 1 Technology Drive, Suite F217, Irvine, CA 92618, USA	TEL.+1(949)727-4017	E-mail : info-am@magnescale.com
Magnescale Europe GmbH	: Antoniusstrasse 14, 73249 Wernau, Germany	TEL.+49(0)7153-934-291	E-mail : info-eu@magnescale.com
Customer Support	: 45 Suzukawa, Isehara-shi, Kanagawa 259-1146, Japan	TEL.+81(0)463-92-2132	E-mail : info-css@magnescale.com

www.magnescale.com

The contents of this literature are as of Mar. 2025.

Magnescale reserves the right to change product specifications without prior notice.

This catalog is printed with soy ink.
FB-EA04(01)C
C.2503.CB.300

Magnescale

SPEED × PRECISION

Feedback Scale General Catalog

Feedback Scale

Magnescale Co., Ltd.

Advanced technology provides precision and durability in tough environments.

Magnescale is continuously improving its technology to create encoders with the high precision and durability required for machine tool applications. Using advanced magnetic technology, Magnescale encoders operate on a magnetic principle, making them resistant to oil and condensation typically found in machine tools. This ensures consistently stable and precise position detection

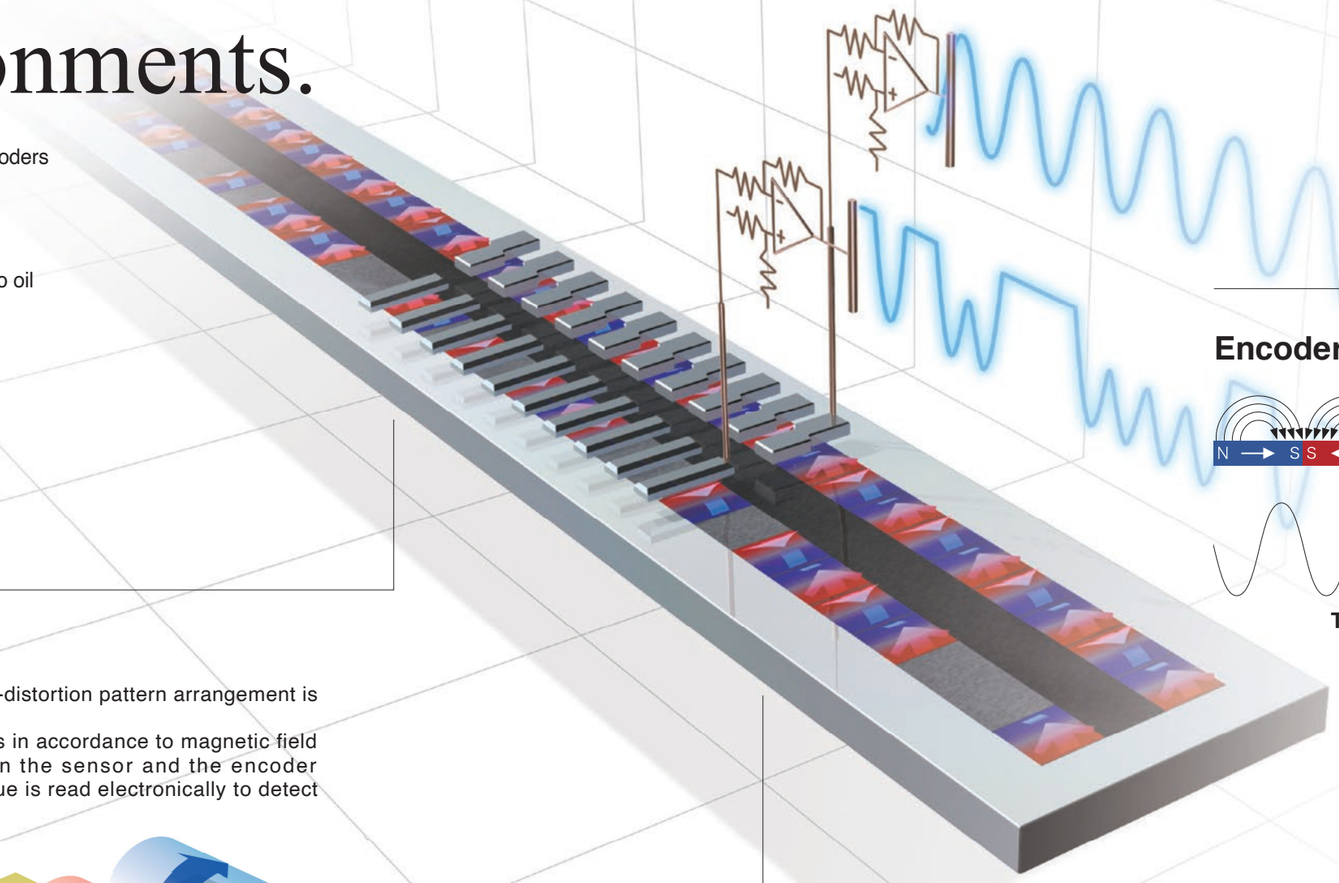

Principle

Detection principle

A thin-film MR device with a high-precision, low-distortion pattern arrangement is used as the reading sensor.
The resistance value of the MR device changes in accordance to magnetic field changes due the relative positions between the sensor and the encoder magnetic media. This change in resistance value is read electronically to detect the amount of positional change.

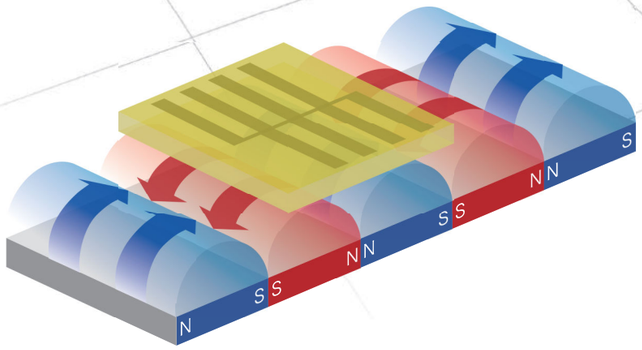

Stability

Encoders signal

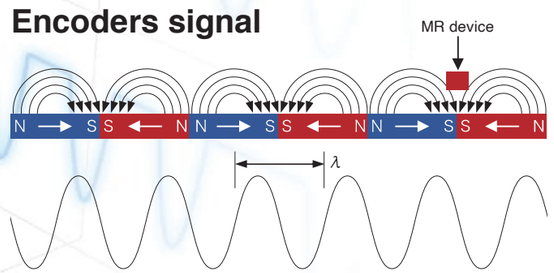

The raw signal is a sine wave

Thermal expansion

Magnescales have the same linear expansion coefficient as the cast iron used in general machine tool structures. This ensures that the encoders exhibit the same thermal behavior as the equipment they are installed on, maintaining extremely stable positioning even in environments with constant temperature changes. The design of the SR series encoders allows them to be installed close to the axis of movement, achieving high positioning accuracy despite large temperature fluctuations

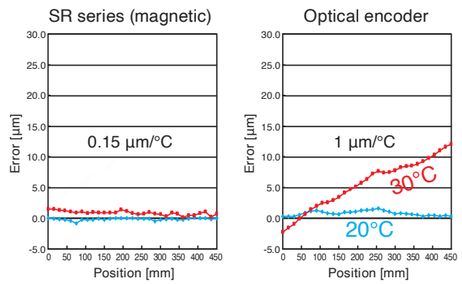

Stronger resistance to harsh environments

Air purging not necessary

SmartSCALE

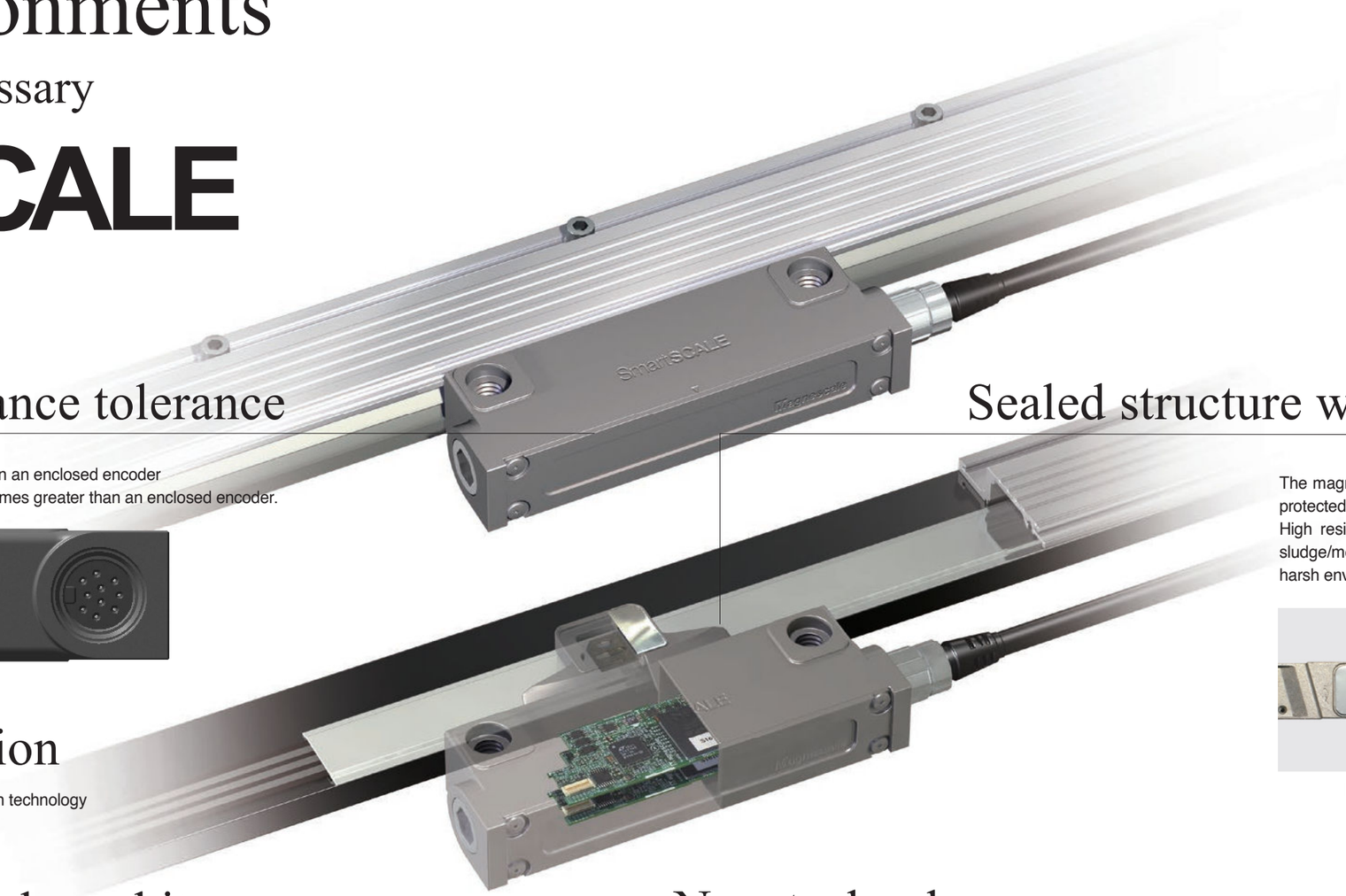

Wide gap and clearance tolerance

Gap between encoder and head : 2 times greater than an enclosed encoder
Clearance tolerance between encoder and head : 5 times greater than an enclosed encoder.

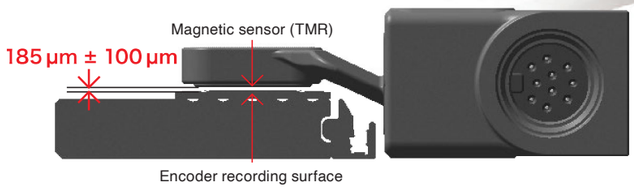

5 nm high-resolution

Achieves 5 nm resolution using the latest interpolation technology and a new algorithm

Sealed structure with IP67 grade

The magnetic encoder and reading sensor are fully protected by a 50 µm thin metal cover.
High resistance to coolant/water splashing and to sludge/metal chips provides stable operation under harsh environments.

Head

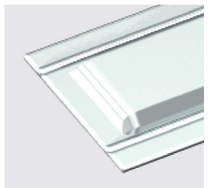

Encoder

Separate type simple architecture

Reduced number of mechanical parts to maintain clearance, resulting in high reliability and durability.

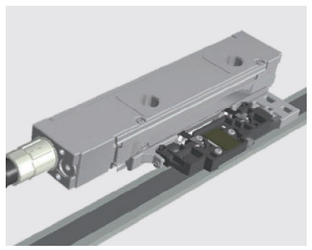

Enclosed type (SR27A)

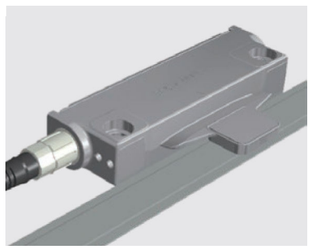

Exposed type (SQ57)

New technology

Development of a new magnetic medium

The output detection signal has improved 30% by changing the composition and consistency of the magnetic medium of the encoder, and by improving the production method.

High output

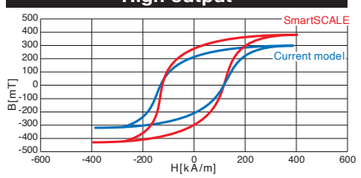

The development of a high sensitivity sensor using a new TMR device

Utilizes a low strain sensor enabling 10 times higher sensitivity compared to the current model by the development of a TMR device based on the Spin-Valve method.

Higher sensitivity

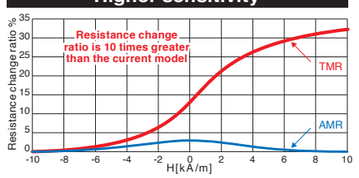

New interpolation calculation method

Achieves 5 nm resolution and higher interpolation accuracy by using a new algorithm

High resolution

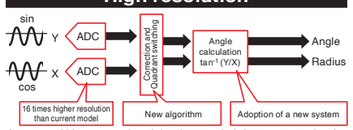

Accuracy within one wavelength has improved 10 times compared to the curent model by adopting a new algorithm with calculation processing.

1/1200 ➡ 1/12800

Lineup

	Communication system	Type	Model name		Output signal	Compatible controllers	Effective length	Maximum resolution	Accuracy	Maximum response speed	Protective design grade	Page
Linear encoder	ABS (Absolute)	Exposed	SmartSCALE SQ57		Absolute serial bidirectional signal Compliant with EIA-485 / DRIVE-CLiQ	FANUC Mitsubishi Electric YASKAWA Electric SIEMENS BiSS-C(*1)	70 to 3,770 mm	0.005 µm	±(1.5 + 1.5L/1,000) µm L : Effective length mm	200 m/min	IP67	P8 - 9
			SmartSCALE SQ47		Absolute serial bidirectional signal Compliant with EIA-485 / DRIVE-CLiQ	FANUC Mitsubishi Electric YASKAWA Electric SIEMENS	90 to 3,740 mm	0.005 µm	±(1.5 + 1.5L/1,000) µm L : Effective length mm	200 m/min	IP67	P10 - 11
		Enclosed	SR27A	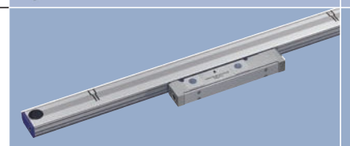	Absolute serial bidirectional signal Compliant with EIA-485 / DRIVE-CLiQ	FANUC Mitsubishi Electric YASKAWA Electric Panasonic(*2) SIEMENS	70 to 2,040 mm	0.01 µm	(3 + 3L/1,000) µmp-p or (5 + 5L/1,000) µmp-p L : Effective length mm	200 m/min	IP54 (Air purge not included) IP65 (Air purge included)	P12 - 13
			SR67A		Absolute serial bidirectional signal Compliant with EIA-485 / DRIVE-CLiQ	FANUC Mitsubishi Electric SIEMENS	140 to 3,640 mm	0.01 µm	(3 + 3L/1,000) µmp-p or (5 + 5L/1,000) µmp-p L : Effective length mm	200 m/min	IP54 (Air purge not included) IP65 (Air purge included)	P14 - 15
	INC (Incremental)	Enclosed	SR24		A/B/Reference point Line driver signal Compliant with EIA-422	–	70 to 2,040 mm	0.05 µm	(3 + 3L/1,000) µmp-p or (5 + 5L/1,000) µmp-p L : Effective length mm	50 m/min (Resolution : 0.1 µm Minimum phase difference : at 50 ns)	IP54 (Air purge not included) IP65 (Air purge included)	P16 - 17

*1 : Please contact our sales department.

*2 : Scheduled to go on sale in 2025.

	Communication system	Type	Model name		Output signal	Compatible controllers	Through hole diameter	Maximum resolution	Accuracy	Maximum response speed	Protective design grade	Page
Angle encoder	ABS (Absolute)	Exposed	RS97-1024E	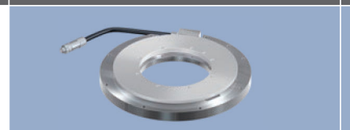	Absolute serial bidirectional signal Compliant with EIA-485 / DRIVE-CLiQ	FANUC Mitsubishi Electric SIEMENS	Φ96 mm	23 bit (8,388,608 pulses/revolution) or 25 bit (33,554,432 pulses/revolution)	±2.5 "	5,000 min^{-1}	IP65	P18 - 19
			RS97-1024N	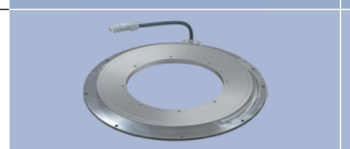	Absolute serial bidirectional signal Compliant with EIA-485 / DRIVE-CLiQ	FANUC SIEMENS	Φ180 mm	23 bit (8,388,608 pulses/revolution) or 25 bit (33,554,432 pulses/revolution)	±2.5 "	5,000 min^{-1}	IP65	P20 - 21
		Enclosed	RU97-2048		Compliant with DRIVE-CLiQ	SIEMENS	A : Φ20 mm B : Φ22 mm	25 bit (33,554,432 pulses/revolution)	±2.5 "	2,000 min^{-1} (Maximum mechanical revolutions : 3,000 min^{-1})	IP65	P22 - 23
			RU77-4096		Absolute serial bidirectional signal Compliant with EIA-485	FANUC Mitsubishi Electric YASKAWA Electric	Φ20 mm	25 bit (33,554,432 pulses/revolution)	±2.5 "	2,000 min^{-1} (Maximum mechanical revolutions : 3,000 min^{-1})	IP65	P24 - 25
	INC (Incremental)	Enclosed	RU74		A/B/Reference point Line driver signal Compliant with EIA-422	–	Φ20 mm	360,448 pulses/revolution or 3,600,384 pulses/revolution	±2.5 "	2,000 min^{-1}	IP65	P26 - 27

Magnescale reserves the right to change product specifications without prior notice.

Absolute linear encoder

Exposed type SmartSCALE

SQ57

- No air purging is required even in harsh environments.
- Separate and bearingless construction for long service life
- Sealed structure with IP67 grade

FANUC | Mitsubishi Electric | YASKAWA Electric | SIEMENS | BiSS-C*

* Please contact our sales department.

Dimensions

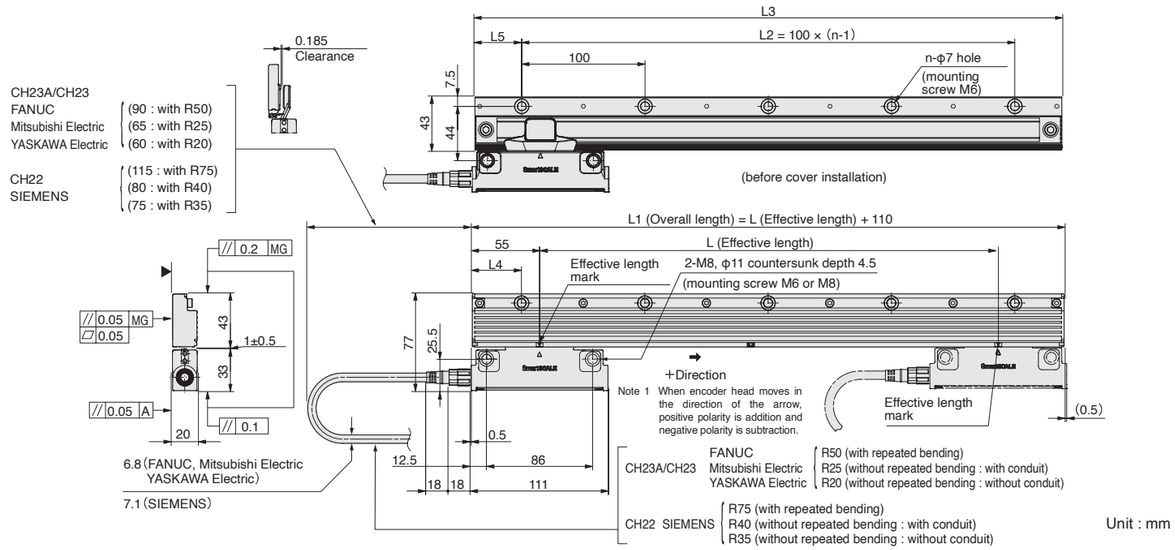

Effective length	Overall length	Mounting pitch				Number of bolts
L	L1	L2	L3	L4	L5	n
70	180	100	176	40	38	2
120	230	200	226	15	13	3
170	280	200	276	40	38	3
220	330	300	326	15	13	4
270	380	300	376	40	38	4
320	430	400	426	15	13	5
370	480	400	476	40	38	5
470	580	500	576	40	38	6
570	680	600	676	40	38	7
620	730	700	726	15	13	8
670	780	700	776	40	38	8
770	880	800	876	40	38	9
870	980	900	976	40	38	10
970	1,080	1,000	1,076	40	38	11
1,070	1,180	1,100	1,176	40	38	12
1,170	1,280	1,200	1,276	40	38	13
1,270	1,380	1,300	1,376	40	38	14

Effective length	Overall length	Mounting pitch				Number of bolts
L	L1	L2	L3	L4	L5	n
1,370	1,480	1,400	1,476	40	38	15
1,470	1,580	1,500	1,576	40	38	16
1,570	1,680	1,600	1,676	40	38	17
1,670	1,780	1,700	1,776	40	38	18
1,770	1,880	1,800	1,876	40	38	19
1,870	1,980	1,900	1,976	40	38	20
1,970	2,080	2,000	2,076	40	38	21
2,070	2,180	2,100	2,176	40	38	22
2,270	2,380	2,300	2,376	40	38	24
2,470	2,580	2,500	2,576	40	38	26
2,670	2,780	2,700	2,776	40	38	28
2,870	2,980	2,900	2,976	40	38	30
3,070	3,180	3,100	3,176	40	38	32
3,270	3,380	3,300	3,376	40	38	34
3,470	3,580	3,500	3,576	40	38	36
3,670	3,780	3,700	3,776	40	38	38
3,770	3,880	3,800	3,876	40	38	39

Unit : mm

MG : Machine guide

For effective length exceeding 3,770 mm, please contact our sales department.

Note ・The surface indicated by the ▲ marks is the installation surface

Specifications

Model name	SQ57-×××S□A###	SQ57 -×××S□BX -×××S□DX	SQ57-×××S□F###	SQ57-××× S□Z▼
Effective length (L: mm)	70 to 3,770 *1			
Thermal expansion coefficient	12 ± 1 × 10^{-6}/°C (encoder alone)			
Accuracy (at 20°C)	± (1.5 + 1.5L/1000) µm L : Effective length mm			
Reference point	Center, or user-selected position (Factory set)	Fixed to center	Center, or user-selected position (Factory set)	10 mm from left end of the effective length to the left outside
Output signal	Absolute serial bidirectional signal, compliant with EIA-485			Compliant with DRIVE-CLiQ
Compatible controllers	FANUC α/αi interface compatible	Mitsubishi Electric	YASKAWA Electric	SIEMENS AG
Resolution	Selectable from 0.005, 0.01, 0.05, 0.1, 0.5 and 1 µm (Factory set)		Selectable from 0.005 and 0.01 µm (Factory set)	
Maximum response speed	200 m/min			
Functional safety	—			IEC 61508, EN/BS 62061 SIL 2 EN/BS/ISO 13849-1 Cat. 3 / PL d EN/BS 61800-5-2
Product Safety	FCC Part15 Subpart B Class A ICES-003 Class A Digital Device EN/BS 61000-6-2, EN/BS 61000-6-4			
Product Environment	EN/BS 63000			
Operating temperature	0 to +50 °C			
Storage temperature	-20 to +60 °C			
Vibration resistance	250 m/s² (50 Hz to 2,000 Hz)			
Impact resistance	980 m/s² (11 ms)			
Protective design grade	IP67			
Power supply voltage	DC +4.75 to +5.25 V			DC +17 to +30.8 V
Maximum power consumption	1.35 W (TYP)			2.1 W (TYP) (24 V)
Consumption current	270 mA (TYP)			85 mA (TYP) (24 V)
Mass	Sensor head 120 g, Encoder 430 + (2.9×Effective length (mm)) g			
Compatible cables (types without relay connectors) Maximum cable length	CH23A-***NVF 11 m	CH23-***NVM 11 m	CH23-***NVG 11 m	CH22-***NSMY 30 m
Compatible cables (types with relay connectors) Maximum cable length	CH23A-***NVK + CH23A-***NPFA 30 m	CH23-***NVK + CH23-***NPMA 30 m	CH23-***NVK + CH23-***NVGA + CH23-***NVGA 30 m *2	CH22-***NSMF + CH22-*** NSFY 30 m

*1 For effective length exceeding 3,770 mm, please contact our sales department.
*2 Three-piece configuration; cannot be used in two-piece configuration.
Magnescale reserves the right to change product specifications without prior notice.

Details of model designation

Encoder

SQ57-×××S□△###

SQ57-×××S□Z▼

[×××] Effective length (cm)

[S] Accuracy grade
±(1.5+1.5L/1000) µm

L : Effective length (mm)

[□] Resolution and direction (µm)

Type	Direction	Resolution	Type	Direction	Resolution
S	+	0.005	T	−	0.005
A		0.01	F		0.01
B		0.05	G		0.05
C		0.1	H		0.1
D		0.5	J		0.5
E		1	K		1

YASKAWA Electric, SIEMENS AG : S, A only
Mitsubishi Electric : S, A, B, C, D, E only

[△] Communication protocol

Type	NC manufacturer	Remarks
A	FANUC	α / αi interface
B	Mitsubishi Electric	Half duplex
D	Mitsubishi Electric	Full duplex
F	YASKAWA Electric	Half duplex
Z	SIEMENS AG	DRIVE-CLiQ

[#] Reference point position
(FANUC, Mitsubishi Electric, YASKAWA Electric)

Type	Reference point position
X	Effective length center
(Absolute position)	Distance from left end of effective length

Mitsubishi Electric : X only
If the reference point from the left end of effective length is greater than 1000, the left two digits are letters of the alphabet

[▼] Reference point position(SIEMENS AG)

Type	Reference point position : Left from the edge of the effective length
Y	Online diagnostic function not supported
Z	Online diagnostic function support

Cables

CH22-□□□○▽※#

[□□□] Cable length
Written by flush right, indication in "m" units, up to 30 m, 0.5 m pitch
(Example)

Type	Cable length
015	1.5 m
070	7 m
260	26 m

[○] Conduit specification

Type	Conduit specification
C	With conduit
N	Without conduit (standard)

CH23-□□□○▽※#

CH23A-□□□○▽※#
(CH23A : FANUC model only)

[□□□]
Cable length
(Example)

Type	Cable length
010	1 m
005	0.5 m
065	6.5 m
100	10 m

[○] Conduit specification

Type	Conduit specification
C	With conduit
N	Without conduit

[▽] Cable sheath

Type	Cable specification
V	PVC (Φ6.8) [Encoder side]
C	PU (Φ6.8) [Encoder]
P	PVC (Φ8) [Controller side]
E	PU (Φ8) [Controller side]

[▽] Cable seath (covering)

Type	Cable specification
S	PU

[※] Encoder side connector : a

Type	Specification	Remarks
M	Encoder head connector	Standard
F	M12 connector (Female) made by Phoenix Contact	Relay/ Waterproofing

[#] Controller side connector : b

Type	Specification	Remarks
None	Open-end	
Y	RJ45 connector made by YAMAICHI ELECTRONICS	Adopts NC machine tool
Z	RJ45 connector (water proof) made by YAMAICHI ELECTRONICS	Relay
F	M12 connector (Male) made by Phoenix Contact	Relay/ Waterproofing

[※] Controller side connector : b

Type	Specification	Remarks	
Z	Open-end*	Encoder side connector should be 10P JN2 (Female) made by Japan Aviation Electronics Industry or 12P made by TAJIMI ELECTRONICS	
None		Standard	
M*	10P made by 3M		Mitsubishi Electric NC, J3
F	20P straight case made by Honda Tsushin Kogyo		FANUC
G*	6P made by Molex Japan LLC		YASKAWA Electric
J	Horizontal drawing case made by HIROSE Electric		FANUC
K	10P JN1 (Male) made by Japan Aviation Electronics Industry		Relay
N	12P R04 (Male) made by TAJIMI ELECTRONICS		Relay (fixed)

* CH23 only

[#] Encoder side connector : a

Type	Specification	Remarks
None	Original of Magnescale	Standard
A	10P JN2 (Female) made by Japan Aviation Electronics Industry	Relay
C	12P R04-9125JF8.5 made by TAJIMI ELECTRONICS	Relay (fixed)

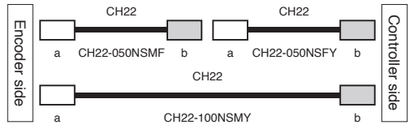

CH22-050NSMF
example)
Cable length 5 m
Without conduit
PU sheath
Encoder side connector
Original of Magnescale
Controller side connector
M12 (Male) made by
Phoenix Contact

CH22-100NSMY
example)
Cable length 10 m
Without conduit
PU sheath
Encoder side connector
Original of Magnescale
Controller side connector
RJ45 by
YAMAICHI ELECTRONICS

CH22-050NSFY
example)
Cable length 5 m
Without conduit
PU sheath
Encoder side connector
M12 (Female) made by
Phoenix Contact
Controller side connector
RJ45 made by
YAMAICHI ELECTRONICS

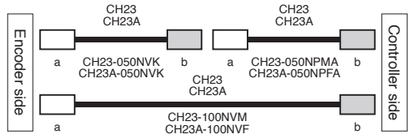

CH23-050NVK
CH23A-050NVK
example)
Cable length 5 m
Without conduit
PVC sheath
Encoder side connector
Original of Magnescale
Controller side connector
10P JN1 (Male) made by Japan
Aviation Electronics Industry

CH23-100NVM
CH23A-100NVF
example)
Cable length 10 m
Without conduit
PVC sheath
Encoder side connector
Original of Magnescale
Controller side connector
<CH23> 10P made by 3M
<CH23A> 20P made
by Honda Tsushin Kogyo

CH23-050NPMA
CH23A-050NPFA
example)
Cable length 5 m
Without conduit
PVC sheath
Encoder side connector
10P JN2 (Female) made by
Japan Aviation Electronics Industry
Controller side connector
<CH23> 10P made by 3M
<CH23A> 20P made
by Honda Tsushin Kogyo

Absolute linear encoder

Exposed type SmartSCALE

SQ47

- No air purging is required even in harsh environments.
- Separate and bearingless construction for long service life
- Sealed structure with IP67 grade

FANUC | Mitsubishi Electric | YASKAWA Electric | SIEMENS

Dimensions

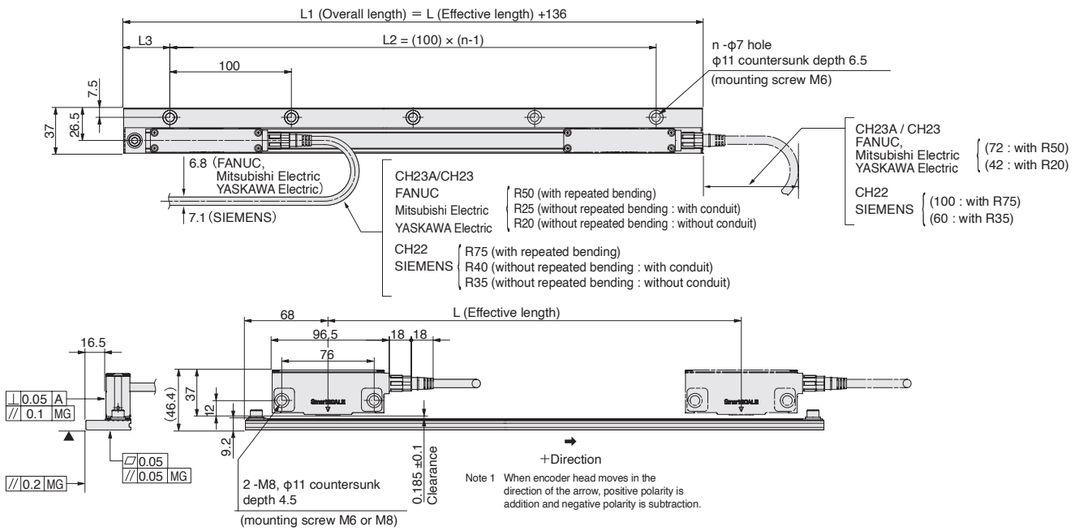

Unit : mm

Effective length	Overall length	Mounting pitch		Number of bolts
L	L1	L2	L3	n
90	226	200	13	3
140	276	200	38	3
190	326	300	13	4
240	376	300	38	4
290	426	400	13	5
340	476	400	38	5
440	576	500	38	6
540	676	600	38	7
590	726	700	13	8
620	756	700	28	8
640	776	700	38	8
740	876	800	38	9
840	976	900	38	10
940	1,076	1,000	38	11
1,040	1,176	1,100	38	12
1,140	1,276	1,200	38	13
1,240	1,376	1,300	38	14

Effective length	Overall length	Mounting pitch		Number of bolts
L	L1	L2	L3	n
1,340	1,476	1,400	38	15
1,440	1,576	1,500	38	16
1,540	1,676	1,600	38	17
1,640	1,776	1,700	38	18
1,740	1,876	1,800	38	19
1,840	1,976	1,900	38	20
1,940	2,046	2,000	38	21
2,040	2,176	2,100	38	22
2,240	2,376	2,300	38	24
2,440	2,576	2,500	38	26
2,640	2,776	2,700	38	28
2,840	2,976	2,900	38	30
3,040	3,176	3,100	38	32
3,240	3,376	3,300	38	34
3,440	3,576	3,500	38	36
3,640	3,776	3,700	38	38
3,740	3,876	3,800	38	39

Unit : mm

MG : Machine guide

For effective length exceeding 3,740 mm, please contact our sales department.

Note ・The surface indicated by the ▲ marks is the installation surface

Specifications

Model name	SQ47-xxx★S□A###	SQ47 -xxx★S□BX -xxx★S□DX	SQ47-xxx★S□F###	SQ47-xxx★S□Z▼
Effective length (L : mm)	90 to 3,740*1			
Thermal expansion coefficient	12 ± 1 × 10^{-6}/°C (encoder alone)			
Accuracy (at 20 °C)	± (1.5 + 1.5L/1000) μm L : Effective length mm			
Reference point	Center, or user-selected position (Factory set)	Fixed to center	Center, or user-selected position (Factory set)	10 mm from left end of the effective length to the left outside
Output signal	Absolute serial bidirectional signal, compliant with EIA-485			Compliant with DRIVE-CLiQ
Compatible controllers	FANUC α/αi interface compatible	Mitsubishi Electric	YASKAWA Electric	SIEMENS AG
Resolution	Selectable from 0.005, 0.01, 0.05, 0.1, 0.5 and 1 μm (Factory set)		Selectable from 0.005 and 0.01 μm (Factory set)	
Maximum response speed	200 m/min			
Functional safety	—			IEC 61508, EN/BS 62061 SIL 2 EN/BS/ISO 13849-1 Cat. 3 / PL d EN/BS 61800-5-2
Product Safety	FCC Part15 Subpart B Class A ICES-003 Class A Digital Device EN/BS 61000-6-2, EN/BS 61000-6-4			
Product Environment	EN/BS 63000			
Operating temperature	0 to +50 °C			
Storage temperature	-20 to +60 °C			
Vibration resistance	250 m/s² (50 Hz to 2,000 Hz)			
Impact resistance	980 m/s² (11 ms)			
Protective design grade	IP67			
Power supply voltage	DC +4.75 to +5.25 V			DC +17 to +30.8 V
Maximum power consumption	1.35 W (TYP)			2.1 W (TYP) (24 V)
Consumption current	270 mA (TYP)			85 mA (TYP) (24 V)
Mass	Sensor head 110 g, Encoder 350 + (2.5 × Effective length (mm)) g			
Compatible cables (types without relay connectors) Maximum cable length	CH23A-***NVF 11 m	CH23-***NVM 11 m	CH23-***NVG 11 m	CH22-***NSMY 30 m
Compatible cables (types with relay connectors) Maximum cable length	CH23A-***NVK + CH23A-***NPFA 30 m	CH23-***NVK + CH23-***NPMA 30 m	CH23-***NVK + CH23-***NVGA + CH23-***NVGA 30 m *2	CH22-***NSMF + CH22-*** NSFY 30 m

*1 For effective length exceeding 3,740 mm, please contact our sales department.
*2 Three-piece configuration; cannot be used in two-piece configuration.
Magnescale reserves the right to change product specifications without prior notice.

Details of model designation

Encoder

SQ47-xxx★S□△###

SQ47-xxx★S□Z▼

[xxx] Effective length (cm)

[★] Cable lead-out direction

Type	Lead-out direction
R	Right
L	Left

[S] Accuracy grade
± (1.5+1.5L/1000) μm
L : Effective length (mm)

[□] Resolution and direction (μm)

Type	Direction	Resolution	Type	Direction	Resolution
S	+	0.005	T	−	0.005
A		0.01	F		0.01
B		0.05	G		0.05
C		0.1	H		0.1
D		0.5	J		0.5
E		1	K		1

YASKAWA Electric, SIEMENS AG : S, A only
Mitsubishi Electric : S, A, B, C, D, E only

[△] Communication protocol

Type	NC manufacturer	Remarks
A	FANUC	α / αi interface
B	Mitsubishi Electric	Half duplex
D	Mitsubishi Electric	Full duplex
F	YASKAWA Electric	Half duplex
Z	SIEMENS AG	DRIVE-CLiQ

[#] Reference point position
(FANUC, Mitsubishi Electric, YASKAWA Electric)

Type	Reference point position
X	Effective length center
(Absolute position)	Distance from left end of effective length

Mitsubishi Electric : X only
If the reference point from the left end of effective length is greater than 1000, the left two digits are letters of the alphabet

[▼] Reference point position (SIEMENS AG)

Type	Reference point position : Left from the edge of the effective length
Y	Online diagnostic function not supported
Z	Online diagnostic function support

Cables

CH22-□□□○▽※#

[□□□] Cable length
Written by flush right, indication in "m" units, up to 30 m, 0.5 m pitch
(Example)

Type	Cable length
015	1.5 m
070	7 m
260	26 m

[○] Conduit specification

Type	Conduit specification
C	With conduit
N	Without conduit (standard)

[▽] Cable seath (covering)

Type	Cable specification
S	PU

[※] Encoder side connector : a

Type	Specification	Remarks
M	Encoder head connector	Standard
F	M12 connector (Female) made by Phoenix Contact	Relay/ Waterproofing

[#] Controller side connector : b

Type	Specification	Remarks
None	Open-end	
Y	RJ45 connector made by YAMAICHI ELECTRONICS	Adopts NC machine tool
Z	RJ45 connector (water proof) made by YAMAICHI ELECTRONICS	Relay
F	M12 connector (Male) made by Phoenix Contact	Relay/ Waterproofing

CH23-□□□○▽※#

CH23A-□□□○▽※#
(CH23A : FANUC model only)

[□□□]
Cable length
(Example)

Type	Cable length
010	1 m
005	0.5 m
065	6.5 m
100	10 m

[○] Conduit specification

Type	Conduit specification
C	With conduit
N	Without conduit

[▽] Cable sheath

Type	Cable specification
V	PVC (Φ6.8) [Encoder side]
C	PU (Φ6.8) [Encoder]
P	PVC (Φ8) [Controller side]
E	PU (Φ8) [Controller side]

[※] Controller side connector : b

Type	Specification	Remarks
Z	Open-end*	Encoder side connector should be 10P JN2 (Female) made by Japan Aviation Electronics Industry or 12P made by TAJIMI ELECTRONICS
None		Standard
M*	10P made by 3M	Mitsubishi Electric NC, J3
F	20P straight case made by Honda Tsushin Kogyo	FANUC
G*	6P made by Molex Japan LLC	YASKAWA Electric
J	Horizontal drawing case made by HIROSE Electric	FANUC
K	10P JN1 (Male) made by Japan Aviation Electronics Industry	Relay
N	12P R04 (Male) made by TAJIMI ELECTRONICS	Relay (fixed)

* CH23 only

[#] Encoder side connector : a

Type	Specification	Remarks
None	Original of Magnescale	Standard
A	10P JN2 (Female) made by Japan Aviation Electronics Industry	Relay
C	12P R04-9125JF8.5 made by TAJIMI ELECTRONICS	Relay (fixed)

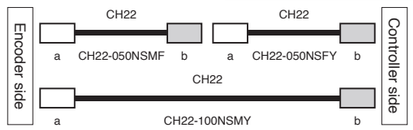

CH22-050NSMF
example)
Cable length 5 m
Without conduit
PU sheath
Encoder side connector
Original of Magnescale
Controller side connector
M12 (Male) made by
Phoenix Contact

CH22-100NSMY
example)
Cable length 10 m
Without conduit
PU sheath
Encoder side connector
Original of Magnescale
Controller side connector
RJ45 by
YAMAICHI ELECTRONICS

CH22-050NSFY
example)
Cable length 5 m
Without conduit
PU sheath
Encoder side connector
M12 (Female) made by
Phoenix Contact
Controller side connector
RJ45 made by
YAMAICHI ELECTRONICS

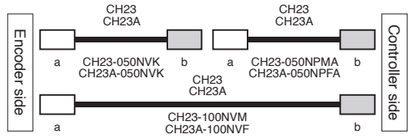

CH23-050NVK
CH23A-050NVK
example)
Cable length 5 m
Without conduit
PVC sheath
Encoder side connector
Original of Magnescale
Controller side connector
10P JN1 (Male) made by Japan
Aviation Electronics Industry

CH23-100NVM
CH23A-100NVF
example)
Cable length 10 m
Without conduit
PVC sheath
Encoder side connector
Original of Magnescale
Controller side connector
<CH23> 10P made by 3M
<CH23A> 20P made
by Honda Tsushin Kogyo

CH23-050NPMA
CH23A-050NPFA
example)
Cable length 5 m
Without conduit
PVC sheath
Encoder side connector
10P JN2 (Female) made by
Japan Aviation Electronics Industry
Controller side connector
<CH23> 10P made by 3M
<CH23A> 20P made
by Honda Tsushin Kogyo

Absolute linear encoder

Enclosed type

SR27A

- Slim design allows installation in narrow spaces
- Magnetic system enables use even in environments with condensation, oil, and other adverse coditions
- Same thermal expansion as iron

FANUC | Mitsubishi Electric | YASKAWA Electric | Panasonic* | SIEMENS

* Scheduled to launch in 2025

Dimensions

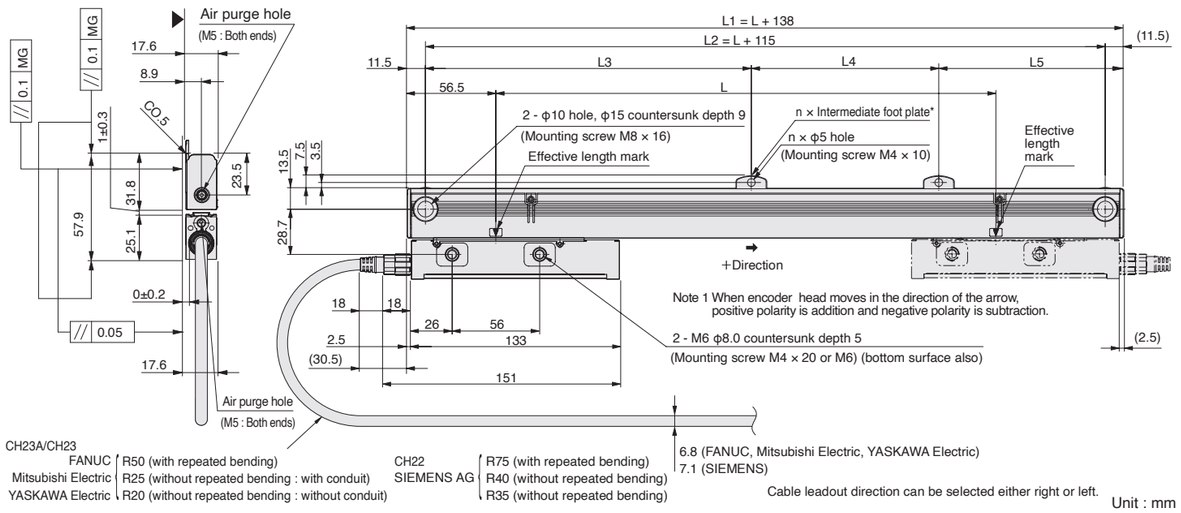

Unit : mm

Effective length	Overall length	Mounting pitch				Number of intermediate foot plates
L	L1	L2	L3	L4	L5	n
70	208	185	–	–	–	0
120	258	235	–	–	–	0
170	308	285	–	–	–	0
220	358	335	–	–	–	0
270	408	385	–	–	–	0
320	458	435	–	–	–	0
370	508	485	–	–	–	0
420	558	535	–	–	–	0
470	608	585	–	–	–	0
520	658	635	–	–	–	0
570	708	685	–	–	–	0
620	758	735	–	–	–	0
670	808	785	392.5	–	392.5	1
720	858	835	417.5	–	417.5	1

Effective length	Overall length	Mounting pitch				Number of intermediate foot plates
L	L1	L2	L3	L4	L5	n
770	908	885	442.5	–	442.5	1
820	958	935	467.5	–	467.5	1
920	1,058	1,035	517.5	–	517.5	1
1,020	1,158	1,135	567.5	–	567.5	1
1,140	1,278	1,255	627.5	–	627.5	1
1,240	1,378	1,355	677.5	–	677.5	1
1,340	1,478	1,455	727.5	–	727.5	1
1,440	1,578	1,555	520	520	515	2
1,540	1,678	1,655	550	550	555	2
1,640	1,778	1,755	585	585	585	2
1,740	1,878	1,855	620	620	615	2
1,840	1,978	1,955	650	650	655	2
2,040	2,178	2,155	720	720	715	2

Unit: mm

MG: Machine guide * Intermediate foot plate: One location when L ≥ 670 mm, two locations when L ≥ 1440 mm

Notes
- The surface indicated by the ▲ marks is the installation surface.
- Movement outside the effective length (L) will damage the encoder head. It is recommended that the mechanical movable length (stroke) be set to 10 mm or more to the inside of both ends of the effective length (L).

Specifications

Model name	SR27A - ×××○□AX###	SR27A - ×××○□BX SR27A - ×××○□DX	SR27A- ×××○□F###	SR27A - ×××○AZY
Effective length (L: mm)	70 to 2,040			
Thermal expansion coefficient	12 ±1 × 10^{-6} /°C			
Accuracy (at 20°C)	(3 + 3L/1,000) µmp-p or (5 +5L/1,000) µmp-p, L: Effective length (mm)			
Reference point	Center, or user-selected position (Factory set)	Fixed to center	Center, or user-selected position (Factory set)	Fixed to 10 mm from left end of effective length
Output signal	Absolute serial bidirectional signal, compliant with EIA-485			Compliant with DRIVE-CLiQ
Compatible controllers	FANUC α/αi interface compatible	Mitsubishi Electric	YASKAWA Electric	SIEMENS AG
Resolution	Selectable from 0.005*1, 0.01, 0.05, 0.1, 0.5 and 1 µm (Factory set)	Selectable from 0.005*1, 0.01, 0.05 and 0.1 µm (Factory set)	Selectable from 0.01, 0.05, λ / 32768 and λ / 4096 µm (Factory set)	0.01 µm (Factory set)
Maximum response speed	200 m/min			
Functional safety	—			IEC 61508, EN/BS 62061 SIL 2 EN/BS/ISO 13849-1 Cat. 3 / PL d EN/BS 61800-5-2
Product Safety	FCC Part15 Subpart B Class A ICES-003 Class A Digital Device EN/BS 61000-6-2, EN/BS 61000-6-4			
Product Environment	EN/BS 63000			
Operating temperature	0 to +50°C			
Storage temperature	-20 to +55°C			
Vibration resistance	150 m/s² (50 Hz to 3,000 Hz)			
Impact resistance	350 m/s² (11 ms)			
Protective design grade	IP54 (Air purge not included), IP65 (Air purge included)			
Power supply voltage	DC +4.75 to +5.25 V			DC +17 to +30.8 V
Maximum power consumption	1.3 W or less (4.75V or 5.25V)			1.75 W or less (17 V) 1.9 W or less (30.8 V)
Consumption current	250 mA (with 5 V controller connection)			75 mA (with 24 V controller connection)
Mass	Approx. 0.39 kg + 1.53 kg/m or less			
Compatible cables (types without relay connectors) Maximum cable length	CH23A-***NVF 13 m	CH23-***NVM 13 m	CH23-***NVG 13 m	CH22-***NSMY 30 m
Compatible cables (types with relay connectors) Maximum cable length	CH23A-***NVK + CH23A-***NPFA 30 m	CH23-***NVK + CH23-***NPMA 30 m	CH23-***NVK + CH23-***NVGA + CH23-***NVGA 30 m *2	CH22-***NSMF + CH22-*** NSFY 30 m

*1 For resolution of 0.005 µm, please contact our sales department. *2 Three-piece configuration; cannot be used in two-piece configuration.
Magnescale reserves the right to change product specifications without prior notice.

Details of model designation

Encoder

SR27A - ×××○□△#

[×××] Effective length (cm)
Refer to the table in "Dimensions".

[○] Accuracy grade

Type	Accuracy grade
A	(5 +5L/1,000) µmp-p
S	(3 +3L/1,000) µmp-p

L: Effective length (mm)

[□] Resolution and direction (µm)

Type	Direction	Resolution	Type	Direction	Resolution	Type	Direction	Resolution*
A	+	0.01	F	–	0.01	L	+	λ/32768
B		0.05	G		0.05			
C		0.1	H		0.1	M		λ/4096
D		0.5	J		0.5			
E		1	K		1			

Mitsubishi Electric : A, B, C only
YASKAWA Electric : A, B, L, M only
SIEMENS AG : A only
* λ : 320 µm

[△] Communication protocol

Type	NC manufacturer	Remarks
A	FANUC	α/αi interface
B	Mitsubishi Electric	Half duplex
D	Mitsubishi Electric	Full duplex
F	YASKAWA Electric	
Z	SIEMENS AG	DRIVE-CLiQ

[#] Reference point position

Type	Reference point position
X	Effective length center
Y	Fixed to 10mm from left end of effective length

SIEMENS AG : Y only
Mitsubishi Electric : X only
Please contact our representative for custom positions.

Cables

CH22 - □□□○▽※#

[□□□] Cable length
Written by flush right, indication in "m" units, up to 30 m, 0.5 m pitch
(Example)

Type	Cable length
015	1.5 m
070	7 m
260	26 m

[○] Conduit specification

Type	Conduit specification
C	With conduit
N	Without conduit (standard)

【▽】Cable seath (covering)

Type	Cable specification
S	PU

【※】Encoder side connector : a

Type	Specification	Remarks
M	Encoder head connector	Standard
F	M12 connector (Female) made by Phoenix Contact	Relay/ Waterproofing

【#】Controller side connector : b

Type	Specification	Remarks
None	Open-end	
Y	RJ45 connector made by YAMAICHI ELECTRONICS	Adopts NC machine tool
Z	RJ45 connector (water proof) made by YAMAICHI ELECTRONICS	Relay
F	M12 connector (Male) made by Phoenix Contact	Relay/ Waterproofing

CH23 - □□□○▽※#
CH23A- □□□○▽※#
(CH23A : FANUC model only)

[□□□]
Cable length
(Example)

Type	Cable length
010	1 m
005	0.5 m
065	6.5 m
100	10 m

[○] Conduit specification

Type	Conduit specification
C	With conduit
N	Without conduit

【▽】Cable sheath

Type	Cable specification
V	PVC (Φ6.8) [Encoder side]
C	PU (Φ6.8) [Encoder]
P	PVC (Φ8) [Controller side]
E	PU (Φ8) [Controller side]

【※】Controller side connector : b

Type	Specification	Remarks
Z	Open-end*	Encoder side connector should be 10P JN2 (Female) made by Japan Aviation Electronics Industry or 12P made by TAJIMI ELECTRONICS
None		Standard
M*	10P made by 3M	Mitsubishi Electric NC, J3
F	20P straight case made by Honda Tsushin Kogyo	FANUC
G*	6P made by Molex Japan LLC	YASKAWA Electric
J	Horizontal drawing case made by HIROSE Electric	FANUC
K	10P JN1 (Male) made by Japan Aviation Electronics Industry	Relay
N	12P R04 (Male) made by TAJIMI ELECTRONICS	Relay (fixed)

* CH23 only

【#】Encoder side connector : a

Type	Specification	Remarks
None	Original of Magnescale	Standard
A	10P JN2 (Female) made by Japan Aviation Electronics Industry	Relay
C	12P R04-9125JF8.5 made by TAJIMI ELECTRONICS	Relay (fixed)

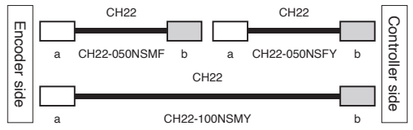

CH22-050NSMF
example)
Cable length 5 m
Without conduit
PU sheath
Encoder side connector
Original of Magnescale
Controller side connector
M12 (Male) made by
Phoenix Contact

CH22-100NSMY
example)
Cable length 10 m
Without conduit
PU sheath
Encoder side connector
Original of Magnescale
Controller side connector
RJ45 by
YAMAICHI ELECTRONICS

CH22-050NSFY
example)
Cable length 5 m
Without conduit
PU sheath
Encoder side connector
M12 (Female) made by
Phoenix Contact
Controller side connector
RJ45 made by
YAMAICHI ELECTRONICS

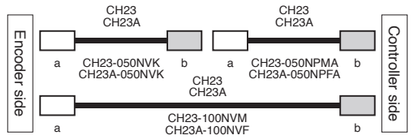

CH23-050NVK
CH23A-050NVK
example)
Cable length 5 m
Without conduit
PVC sheath
Encoder side connector
Original of Magnescale
Controller side connector
10P JN1 (Male) made by Japan
Aviation Electronics Industry

CH23-100NVM
CH23A-100NVF
example)
Cable length 10 m
Without conduit
PVC sheath
Encoder side connector
Original of Magnescale
Controller side connector
<CH23> 10P made by 3M
<CH23A> 20P made
by Honda Tsushin Kogyo

CH23-050NPMA
CH23A-050NPFA
example)
Cable length 5 m
Without conduit
PVC sheath
Encoder side connector
10P JN2 (Female) made by
Japan Aviation Electronics Industry
Controller side connector
<CH23> 10P made by 3M
<CH23A> 20P made
by Honda Tsushin Kogyo

Absolute linear encoder

Enclosed type

SR67A

- High rigidity provides resistance to shock and vibration
- Magnetic system allows use even in environments with condensation, oil, and other adverse conditions
- Same thermal expansion as iron

FANUC | Mitsubishi Electric | SIEMENS

Dimensions

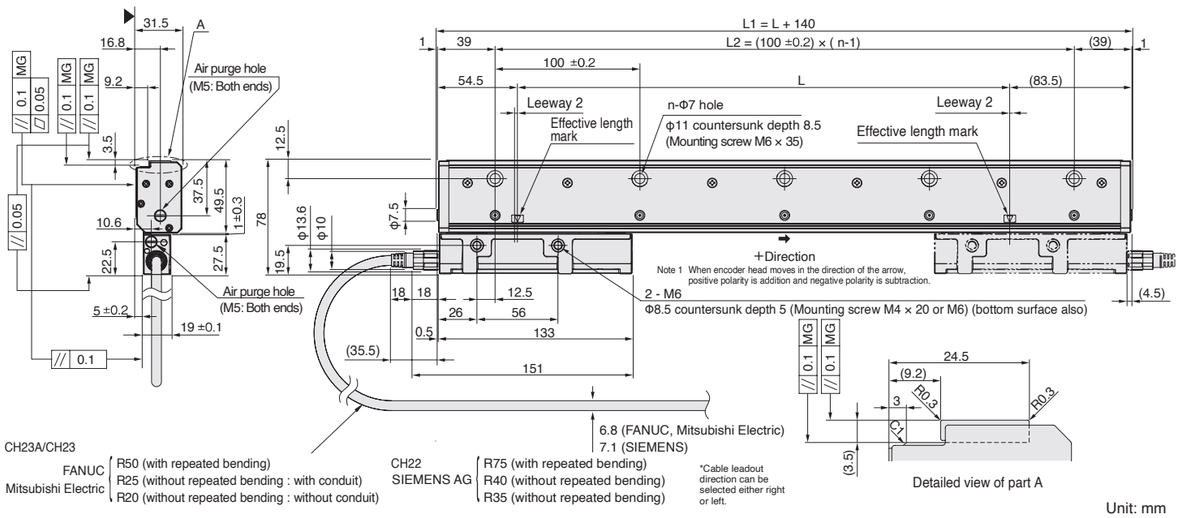

CH23A/CH23
FANUC / Mitsubishi Electric: R50 (with repeated bending), R25 (without repeated bending : with conduit), R20 (without repeated bending : without conduit)

CH22
SIEMENS AG: R75 (with repeated bending), R40 (without repeated bending), R35 (without repeated bending)

Unit: mm

Effective length L	Overall length L1	Mounting pitch L2	Number of bolts n
140	280	200	3
240	380	300	4
340	480	400	5
440	580	500	6
540	680	600	7
640	780	700	8
740	880	800	9
840	980	900	10
940	1,080	1,000	11
1,040	1,180	1,100	12
1,140	1,280	1,200	13
1,240	1,380	1,300	14
1,340	1,480	1,400	15
1,440	1,580	1,500	16

Effective length L	Overall length L1	Mounting pitch L2	Number of bolts n
1,540	1,680	1,600	17
1,640	1,780	1,700	18
1,740	1,880	1,800	19
1,840	1,980	1,900	20
2,040	2,180	2,100	22
2,240	2,380	2,300	24
2,440	2,580	2,500	26
2,640	2,780	2,700	28
2,840	2,980	2,900	30
3,040	3,180	3,100	32
3,240	3,380	3,300	34
3,440	3,580	3,500	36
3,640	3,780	3,700	38

Unit : mm

MG: Machine guide

Notes
- The surface indicated by the ▲ marks is the installation surface.
- Movement outside the effective length (L) will damage the encoder head. It is recommended that the mechanical movable length (stroke) be set to 10 mm or more to the inside of both ends of the effective length (L).

Specifications

Model name	SR67A - ×××○□AX###	SR67A - ×××○□BX SR67A - ×××○□DX	SR67A - ×××○AZY
Effective length (L : mm)	140 to 3,640		
Thermal expansion coefficient	12±1 × 10^{-6} /°C		
Accuracy (at 20 °C)	(3+3L/1,000) µmp-p (effective length 140 to 3,040 mm) or (5+5L/1,000) µmp-p (effective length 140 to 3,640 mm), L: Effective length (mm)		
Reference point	Center, or user-selected position (Factory set)	Fixed to center	Fixed to 10 mm from left end of effective length
Output signal	Absolute serial bidirectional signal, compliant with EIA-485		Compliant with DRIVE-CLiQ
Compatible controllers	FANUC α/αi interface compatible	Mitsubishi Electric	SIEMENS AG
Resolution	Selectable from 0.005*1, 0.01, 0.05, 0.1, 0.5 and 1 µm (Factory set)	Selectable from 0.005*1, 0.01, 0.05 and 0.1 µm (Factory set)	0.01 µm (Factory set)
Maximum response speed	200 m/min		
Functional safety	—		IEC 61508, EN/BS 62061 SIL 2 EN/BS/ISO 13849-1 Cat. 3 / PL d EN/BS 61800-5-2
Product Safety	FCC Part15 Subpart B Class A ICES-003 Class A Digital Device EN/BS 61000-6-2, EN/BS 61000-6-4		
Product Environment	EN/BS 63000		
Operating temperature	0 to +50°C		
Storage temperature	-20 to +55°C		
Vibration resistance	250 m/s² (50 Hz to 2,000 Hz)		
Impact resistance	450 m/s² (11 ms)		
Protective design grade	IP54 (Air purge not included), IP65 (Air purge included)		
Power supply voltage	DC +4.75 to +5.25 V		DC +17 to +30.8 V
Maximum consumption current	1.3 W or less (4.75 V or 5.25 V)		1.75 W or less(17 V) 1.9 W or less (30.8 V)
Consumption current	250 mA (with 5 V controller connection)		75 mA (with 24 V controller connection)
Mass	Approx. 0.9kg+ 5.2kg/m or less		
Compatible cables (types without relay connectors) Maximum cable length	CH23A-***NVF 13 m	CH23-***NVM 13 m	CH22-***NSMY 30 m
Compatible cables (types with relay connectors) Maximum cable length	CH23A-***NVK + CH23A-***NPFA 30 m	CH23-***NVK + CH23-***NPMA 30 m	CH22-***NSMF + CH22-*** NSFY 30 m

*1 For resolution of 0.005 µm, please contact our sales department.
Magnescale reserves the right to change product specifications without prior notice.

Details of model designation

Encoder

SR67A - ××× ○ □ △ #

[×××] Effective length (cm)
Refer to the table in "Dimensions".

[○]Accuracy grade

Type	Accuracy grade
A	(5 + 5 L/1,000) µmp-p
S	(3 + 3 L/1,000) µmp-p

L: Effective length(mm)

[□]Resolution and direction (µm)

Type	Direction	Resolution	Type	Direction	Resolution
A	+	0.01	F	−	0.01
B		0.05	G		0.05
C		0.1	H		0.1
D		0.5	J		0.5
E		1	K		1

Mitsubishi Electric : A, B, C only
SIEMENS AG : A only

[△]Communication protocol

Type	NC manufacture	Remarks
A	FANUC	α / αi interface
B	Mitsubishi Electric	Half duplex
D	Mitsubishi Electric	Full duplex
Z	SIEMENS AG	DRIVE-CLiQ

[#]Reference point position

Type	Reference point position
X	Effective length center
Y	Fixed to 10mm from left end of effective length

SIEMENS AG: Y only
Mitsubishi Electric: X only
Please contact our representative for custom positions.

Cables

CH22 - □□□ ○ ▽ ※ #

[□□□]Cable length
Written by flush right, indication in "m" units, up to 30 m, 0.5 m pitch
(Example)

Type	Cable length
015	1.5 m
070	7 m
260	26 m

[○]Conduit specification

Type	Conduit specification
C	With conduit
N	Without conduit (standard)

【▽】Cable seath (covering)

Type	Cable specification
S	PU

【※】Encoder side connector : a

Type	Specification	Remarks
M	Encoder head connector	Standard
F	M12 connector (Female) made by Phoenix Contact	Relay/ Waterproofing

【#】Controller side connector : b

Type	Specification	Remarks
None	Open-end	
Y	RJ45 connector made by YAMAICHI ELECTRONICS	Adopts NC machine tool
Z	RJ45 connector (water proof) made by YAMAICHI ELECTRONICS	Relay
F	M12 connector (Male) made by Phoenix Contact	Relay/ Waterproofing

CH23 - □□□ ○ ▽ ※ #
CH23A- □□□ ○ ▽ ※ #
(CH23A : FANUC model only)

[□□□]
Cable length
(Example)

Type	Cable length
010	1 m
005	0.5 m
065	6.5 m
100	10 m

[○]Conduit specification

Type	Conduit specification
C	With conduit
N	Without conduit

【※】Controller side connector : b

Type	Specification	Remarks	
Z	Open-end*	Encoder side connector should be 10P JN2 (Female) made by Japan Aviation Electronics Industry or 12P made by TAJIMI ELECTRONICS	
None		Standard	
M*	10P made by 3M		Mitsubishi Electric NC, J3
F	20P straight case made by Honda Tsushin Kogyo		FANUC
J	Horizontal drawing case made by HIROSE Electric		FANUC
K	10P JN1 (Male) made by Japan Aviation Electronics Industry		Relay
N	12P R04 (Male) made by TAJIMI ELECTRONICS		Relay (fixed)

* CH23 only

【▽】Cable sheath

Type	Cable specification
V	PVC (Φ6.8) [Encoder side]
C	PU (Φ6.8) [Encoder]
P	PVC (Φ8) [Controller side]
E	PU (Φ8) [Controller side]

【#】Encoder side connector : a

Type	Specification	Remarks
None	Original of Magnescale	Standard
A	10P JN2 (Female) made by Japan Aviation Electronics Industry	Relay
C	12P R04-9125JF8.5 made by TAJIMI ELECTRONICS	Relay (fixed)

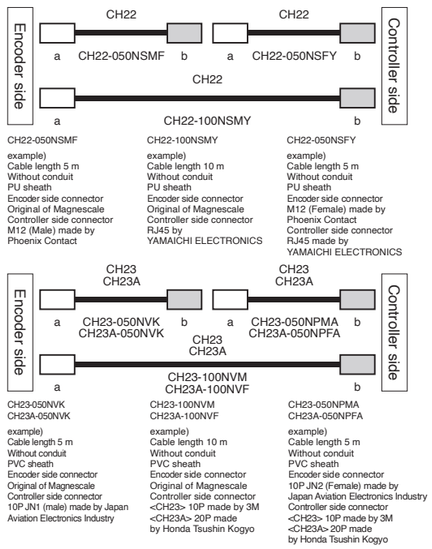

Incremental linear encoder

Enclosed type

SR24

- Slim design allows installation in narrow spaces
- Magnetic system enables use even in environments with condensation, oil, and other adverse coditions
- Same thermal expansion as iron

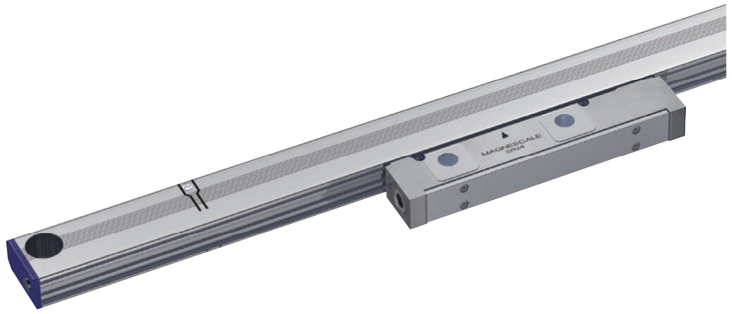

A/B/Refelence point

Dimensions (Cable lead-out direction : Left)

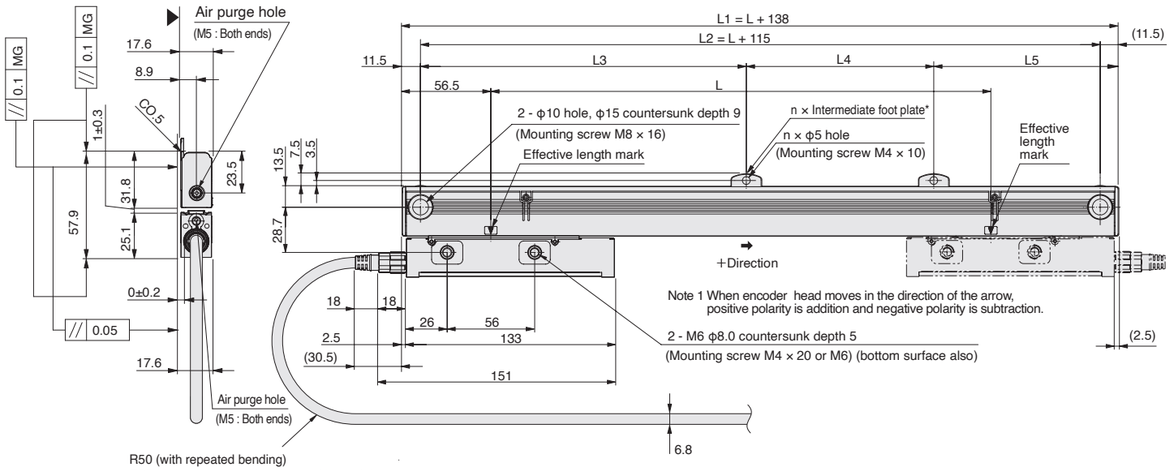

Cable leadout direction can be selected either right or left.

Unit : mm

Effective length	Overall length	Mounting pitch				Number of intermediate foot plates
L	L1	L2	L3	L4	L5	n
70	208	185	–	–	–	0
120	258	235	–	–	–	0
170	308	285	–	–	–	0
220	358	335	–	–	–	0
270	408	385	–	–	–	0
320	458	435	–	–	–	0
370	508	485	–	–	–	0
420	558	535	–	–	–	0
470	608	585	–	–	–	0
520	658	635	–	–	–	0
570	708	685	–	–	–	0
620	758	735	–	–	–	0
670	808	785	392.5	–	392.5	1
720	858	835	417.5	–	417.5	1

Effective length	Overall length	Mounting pitch				Number of intermediate foot plates
L	L1	L2	L3	L4	L5	n
770	908	885	442.5	–	442.5	1
820	958	935	467.5	–	467.5	1
920	1,058	1,035	517.5	–	517.5	1
1,020	1,158	1,135	567.5	–	567.5	1
1,140	1,278	1,255	627.5	–	627.5	1
1,240	1,378	1,355	677.5	–	677.5	1
1,340	1,478	1,455	727.5	–	727.5	1
1,440	1,578	1,555	520	520	515	2
1,540	1,678	1,655	550	550	555	2
1,640	1,778	1,755	585	585	585	2
1,740	1,878	1,855	620	620	615	2
1,840	1,978	1,955	650	650	655	2
2,040	2,178	2,155	720	720	715	2

Unit: mm

MG : Machine guide * Intermediate foot plate : One location when L ≥ 670 mm, two locations when L ≥ 1440 mm

Notes
- The surface indicated by the ▲ marks is the installation surface.
- Movement outside the effective length (L) will damage the encoder head. It is recommended that the mechanical movable length (stroke) be set to 10 mm or more to the inside of both ends of the effective length (L).

Specifications

Model name	SR24-×××○□◆###
Effective length (L: mm)	70 to 2,040
Thermal expansion coefficient	12 ±1 × 10^{-6} /°C
Accuracy (at 20°C)	(3 + 3L/1,000) µmp-p or (5 + 5L/1,000) µmp-p, L : Effective length (mm)
Reference point	Center point, Multi-point (40 mm pitch), User-selected point (1 mm pitch)
Output signal	A/B/Reference point, line driver signal, compliant with EIA-422
Resolution	Selectable from 0.05, 0.1, 0.5 and 1 µm (Factory set)
Maximum response speed	50 m/min (Resolution : 0.1 µm, Minimum phase difference: at 50 ns)
Product Safety	FCC Part15 Subpart B Class A ICES-003 Class A Digital Device EN/BS 61000-6-2, EN/BS 61000-6-4
Product Environment	EN/BS 63000
Operating temperature	0 to +50 °C
Storage temperature	-20 to +55 °C
Vibration resistance	150 m/s² (50 Hz to 3,000 Hz)
Impact resistance	350 m/s² (11 ms)
Protective design grade	IP54 (Air purge not included), IP65 (Air purge included)
Power supply voltage	DC +4.75 to +5.25 V (with connectiong terminal)
Maximum power consumption	1.3 W or less (4.75 V to 5.25 V)
Consumption current	250 mA (with 5 V controller connection)
Mass	Approx. 0.39 kg + 1.53 kg/m or less
Compatible cables (types without relay connectors) Maximum cable length	CH23-***NV 13 m
Compatible cables (types with relay connectors) Maximum cable length	CH23-***NVU + CH23-NPUW + CH23-NPZW 30 m*1

*1 Three-piece configuration; cannot be used in two-piece configuration.
Magnescale reserves the right to change product specifications without prior notice.

Details of model designation

Encoder

SR24 - ××× ○ □ ◆ ###

[×××] Effective length (cm)

[○] Accuracy grade

Type	Accuracy grade
A	(5 + 5L/1,000) µmp-p
S	(3 + 3L/1,000) µmp-p

L : Effective length (mm)

[□] Resolution and direction (µm)

Type	Direction	Resolution	Type	Direction	Resolution
B	+	0.05	G	–	0.05
C		0.1	H		0.1
D		0.5	J		0.5
E		1	K		1

[###] Reference point position (Arbitrary position can be specified)

Type	Reference point position
X	Center of effective length
Y	Multi-point

[◆] Minimum phase difference

Type	Phase difference (ns)	Type	Phase difference (ns)	Type	Phase difference (ns)
A	50	F	300	L	1,250
B	100	G	400	M	2,500
C	150	H	500	N	3,000
D	200	J	650		
E	250	K	1,000		

Note : No setting for the following combinations
Resolution 0.05 µm / Minimum phase difference 1000 to 3000 ns
Resolution 0.1, 0.5 µm / Minimum phase difference 3000 ns

CH23 - □□□ ○ ▽ ※ #

[□□□] Cable length
(Example)

Type	Cable length
010	1 m
005	0.5 m
065	6.5 m
100	10 m

[○] Conduit specification

Type	Conduit specification
C	With conduit
N	Without conduit

[▽] Cable sheath

Type	Cable specification
V	PVC (Φ6.8) [Encoder side]
C	PU (Φ6.8) [Encoder]
P	PVC (Φ8) [Controller side]
E	PU (Φ8) [Controller side]

[※] Controller side connector : b

Specification	Remarks		記号	
Earth wire			Without	With
Open-end	Encoder side connector should be 11P LF13WB (female) made by HIROSE Electric		Z	—
	Standard		None	—
D-Sub 9P			D	—
10P made by 3M		Mitsubishi Electric NC, J3	L	—
20P straight case made by Honda Tsushin Kogyo		FANUC	E	P
20P horizontal drawing case made by HIROSE Electric		FANUC	H	R
11P LF13WB (male) made by HIROSE Electric		Relay	U	—

[#] Encoder side connector : a

Specification	Remarks	Type
Original of Magnescale	Standard	None
11P LF13WB (female) made by HIROSE Electric	Relay	W

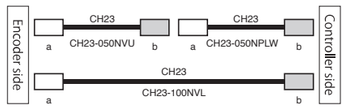

CH23-050NVU
example)
Cable length 5 m
Without conduit
PVC sheath
Encoder side connector
Original of Magnescale
Controller side connector
11P LF13WB (male)
made by HIROSE Electric

CH23-100NVL
example)
Cable length 10 m
Without conduit
PVC sheath
Encoder side connector
Original of Magnescale
Controller side connector
10P made by 3M

CH23-050NPLW
example)
Cable length 5 m
Without conduit
PVC sheath
Encoder side connector
11P LF13WB (female)
made by HIROSE Electric
Controller side connector
10P made by 3M

Absolute angle encoder

Exposed type

RS97-1024E

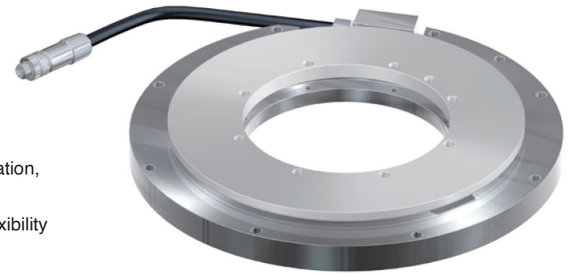

- Magnetic system allows use even in environments with condensation, oil, and other adverse conditions
- 96 mm diameter through-hole allows for design and mounting flexibility
- Dual head configuration reduces the effect of axial runout

FANUC | Mitsubishi Electric | SIEMENS

Dimensions

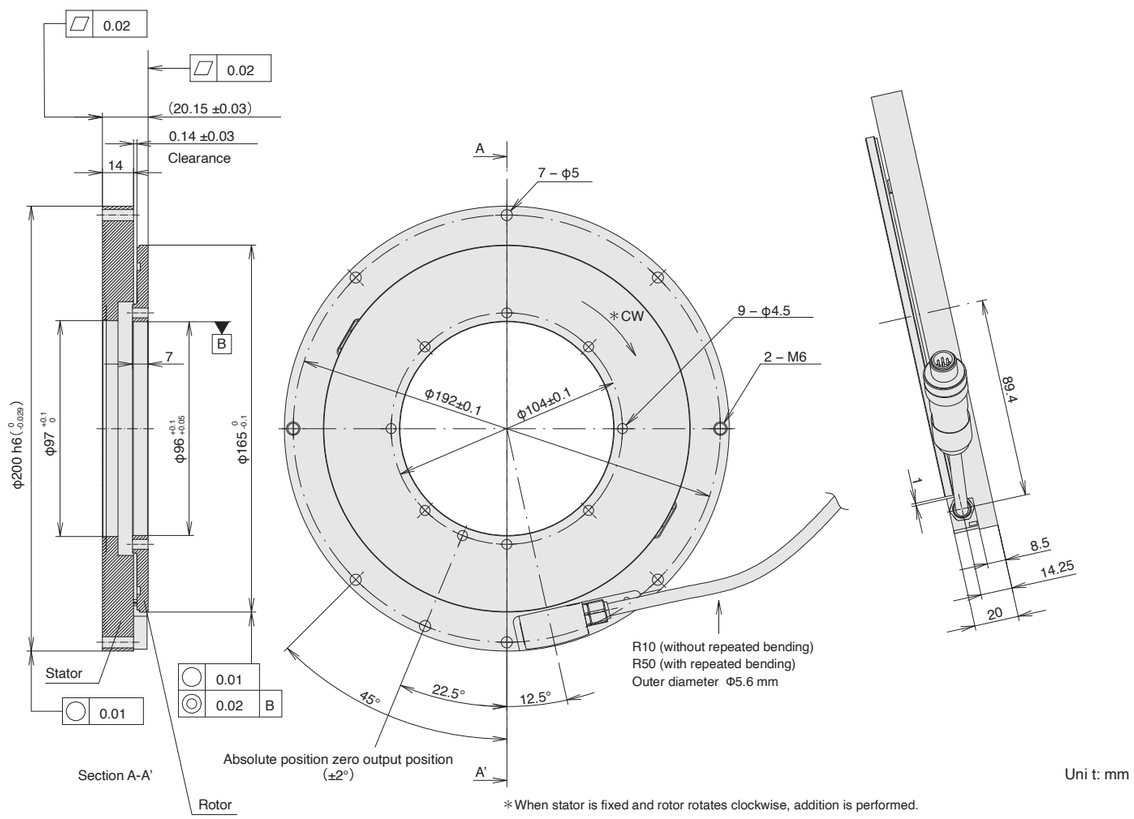

∗When stator is fixed and rotor rotates clockwise, addition is performed.

Specifications

Model name	RS97-1024E□A■■	RS97-1024EGD■■	RS97-1024EGZ■■
Output wave number	1,024 waves/revolution		
Through hole diameter	φ96 mm		
Accuracy (at 20°C)	±2.5"		
Output signal	Absolute serial bidirectional signal, compliant with EIA-485		Compliant with DRIVE-CLiQ
Compatible controllers	FANUC	Mitsubishi Electric	SIEMENS AG
Resolution	23 bits (8,388,608 pulses/revolution) or 25 bits (33,554,432 pulses/revolution)	23 bits (8,388,608 pulses/revolution)	
Maximum response revolutions	5,000 min^{-1}		
Functional safety	—		IEC 61508, EN/BS 62061 SIL 2 EN/BS/ISO 13849-1 Cat. 3 / PL d EN/BS 61800-5-2
Product Safety	FCC Part15 Subpart B Class A ICES-003 Class A Digital Device EN/BS 61000-6-2, EN/BS 61000-6-4		
Product Environment	EN/BS 63000		
Operating temperature	0 to +60°C		
Storage temperature	-10 to +60°C		
Vibration resistance	150 m/s^2 (50 Hz to 2,000 Hz)		
Impact resistance	1,000 m/s^2 (11 ms)		
Protective design grade	IP65		
Power supply voltage	DC +4.75 to +5.25 V		DC +17 to +30.8 V
Maximum consumption current	1.25 W or less (4.75 V) 1.2 W or less (5.25 V)		2.8 W or less (17 V) 3.3 W or less (30.8 V)
Consumption current	330 mA (with 5 V controller connection)		150 mA (with 24 V controller connection)
Output connector	JN1HS10PL4S made by Japan Aviation Elecronics Industry		SACC-M12MS-8QH made by Phoenix Contact
Moment of inertia	9×10^{-4} kg·m^2 or less		
Mass	Approx. 2 kg (rotor: 0.2 kg/ stator: 1.7 kg) or less		
Compatible cables (types without relay connectors) Maximum cable length	CH23A-***NPFA 30 m	CH23-***NPMA 30 m	CH22-***NSFY 30 m
Compatible cables (types with relay connectors) Maximum cable length	CH23A-***NPKA + CH23A-***NPFA 30 m	CH23-***NPKA + CH23-***NPMA 30 m	CH22-***NSFF + CH22-***NSFY 30 m

Magnescale reserves the right to change product specifications without prior notice.

Details of model designation

Encoder

RS97 - 1024E □ △ ■ ■

[E] Rotor inner diameter
96 mm

[□] Resolution

Type	Resolution
G	23 bit
J	25 bit

[△] Communication protocol

Type	NC manufacturer	Remarks
A	FANUC	α interface
D	Mitsubishi Electric	Half duplex
Z	SIEMENS AG	DRIVE-CLiQ

[■■] Head cable length

Type	Head cable length
01	1 m
02	2 m

Cables

CH22 - □ □ □ ○ ▽ ※ #

[□□□] Cable length
Written by flush right, indication in "m" units, up to 30 m, 0.5 m pitch
(Example)

Type	Cable length
015	1.5 m
070	7 m
260	26 m

[○] Conduit specification

Type	Conduit specification
C	With conduit
N	Without conduit

[▽] Cable seath (covering)

Type	Cable specification
S	PU

[※] Encoder side connector : a

Type	Specification	Remarks
M	Encoder head connector	Standard
F	M12 connector (Female) made by Phoenix Contact	Relay/ Waterproofing

[#] Controller side connector : b

Type	Specification	Remarks
None	Open-end	
Y	RJ45 connector made by YAMAICHI ELECTRONICS	Adopts NC machine tool
Z	RJ45 connector (water proof) made by YAMAICHI ELECTRONICS	Relay
F	M12 connector (Male) made by Phoenix Contact	Relay/ Waterproofing

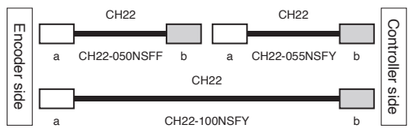

CH22-050NSFF
example)
Cable length 5 m
Without conduit
PU sheath
Encoder side connector
M12 (Female) made by
Phoenix Contact
Controller side connector
M12 (Male) made by
Phoenix Contact

CH22-100NSFY
example)
Cable length 10 m
Without conduit
PU sheath
Encoder side connector
M12 (Female) made by
Phoenix Contact
Controller side connector
RJ45 made by
YAMAICHI ELECTRONICS

CH22-055NSFY
example)
Cable length 5 m
Without conduit
PU sheath
Encoder side connector
M12 (Female) made by
Phoenix Contact
Controller side connector
RJ45 made by
YAMAICHI ELECTRONICS

CH23 - □ □ □ ○ ▽ ※ #
CH23A - □ □ □ ○ ▽ ※ #
(CH23A : FANUC model only)

[□□□]
Cable length
(Example)

Type	Cable length
010	1 m
005	0.5 m
065	6.5 m
100	10 m

[○] Conduit specification

Type	Conduit specification
C	With conduit
N	Without conduit

[▽] Cable sheath

Type	Cable specification
P	PVC (Φ8) [Controller side]
E	PU (Φ8) [Controller side]

[※] Controller side connector : b

Type	Specification	Remarks	
Z	Open-end	Encoder side connector should be 10P JN2 (Female) made by Japan Aviation Electronics Industry or 2P made by TAJIMI ELECTRONICS	
None		Standard	
M	10P made by 3M		Mitsubishi Electric NC, J3
F	20P straight case made by Honda Tsushin Kogyo		FANUC
J	Horizontal drawing case made by HIROSE Electric		FANUC
K	10P JN1 (Male) made by Japan Aviation Electronics Industry		Relay
N	12P R04 (Male) made by TAJIMI ELECTRONICS		Relay (fixed)

[#] Encoder side connector : a

Type	Specification	Remarks
A	10P JN2 (Female) made by Japan Aviation Electronics Industry	Relay

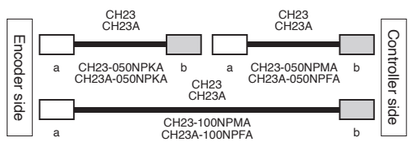

CH23-050NPKA
CH23A-050NPKA
example)
Cable length 5 m
Without conduit
PVC sheath(Φ8)
Encoder side connector
10P JN2 (Female) made by Japan
Aviation Electronics Industry
Controller side connector
10P JN1 (Male) made by
Japan Aviation Electronics Industry

CH23-100NPMA
CH23A-100NPFA
example)
Cable length 10 m
Without conduit
PVC sheath(Φ8)
Encoder side connector
10P JN2 (Female) made by
Japan Aviation Electronics Industry
Controller side connector
<CH23> 10P made
by 3M
<CH23A> 20P made by
Honda Tsushin Kogyo

CH23-050NPMA
CH23A-050NPFA
example)
Cable length 5 m
Without conduit
PVC sheath(Φ8)
Encoder side connector
10P JN2 (Female) made by
Japan Aviation Electronics Industry
Controller side connector
<CH23> 10P made by 3M
<CH23A> 20P made by
Honda Tsushin Kogyo

Absolute angle encoder

Exposed type

RS97-1024N

- Magnetic system enables use even in environments with condensation, oil, and other adverse conditions
- 180 mm diameter through-hole allows for design and mounting flexibility
- Dual head configuration reduces the effect of axial runout

FANUC SIEMENS

Dimensions

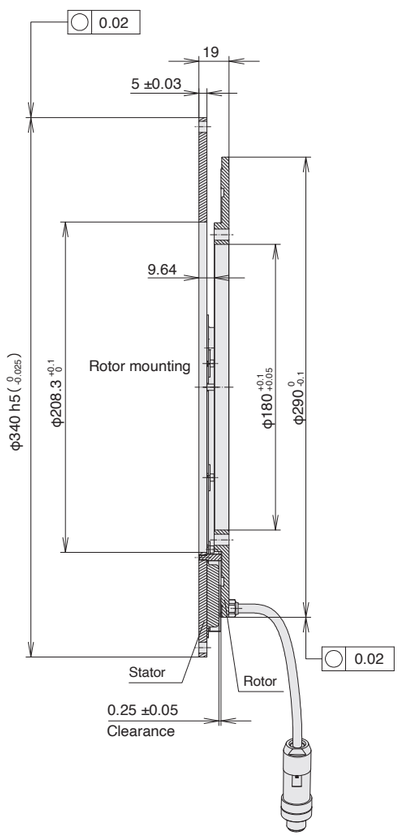

Section A - A'

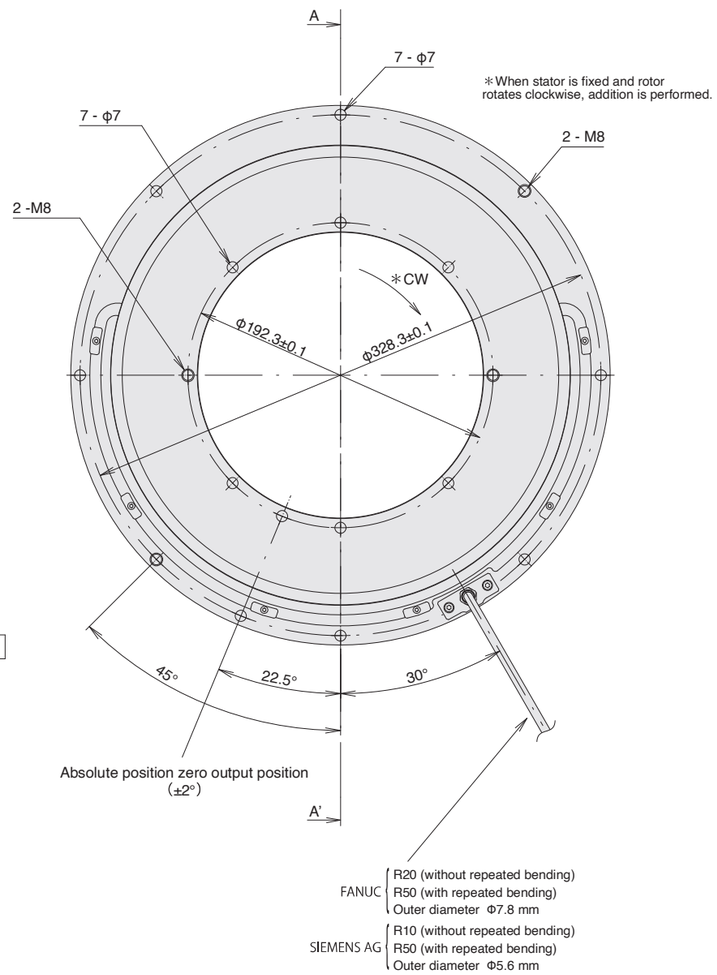

∗When stator is fixed and rotor rotates clockwise, addition is performed.

Unit: mm

Specifications

Model name	RS97-1024N□A■■	RS97-1024NGZ■■
Output wave number	1,024 waves/revolution	
Through hole diameter	φ180 mm	
Accuracy (at 20°C)	±2.5"	
Output signal	Absolute serial bidirectional signal, compliant with EIA-485	
Compatible controllers	FANUC	Compliant with DRIVE-CLiQ
Resolution	23 bits (8,388,608 pulses/revolution) or 25 bits (33,554,432 pulses/revolution)	SIEMENS AG
Maximum response revolutions	5,000 min^{-1} 23 bits (8,388,608 pulses/revolution)	
Functional Safety	—	IEC 61508, EN/BS 62061 SIL 2 EN/BS/ISO 13849-1 Cat. 3 / PL d EN/BS 61800-5-2
Product Safety	FCC Part15 Subpart B Class A ICES-003 Class A Digital Device EN/BS 61000-6-2, EN/BS 61000-6-4	
Product Environment	EN/BS 63000	
Operating temperature	0 to +60°C	
Storage temperature	-10 to +60°C	
Vibration resistance	150 m/s^2 (50 Hz to 2,000 Hz)	
Impact resistance	1,000 m/s^2 (11 ms)	
Protective design grade	IP65	
Power supply voltage	DC +4.75 to +5.25 V	DC +17 to +30.8 V
Maximum consumption current	1.35 W or less (4.75 V) 1.3 W or less (5.25 V)	2.8 W or less (17 V) 3.3 W or less (30.8 V)
Consumption current	300 mA (with 5 V controller connection)	150 mA (with 24 V controller connection)
Output connector	JN1HS10PL2 made by Japan Aviation Elecronics Industry	SACC-M12MS-8Q H made by Phoenix Contact
Moment of inertia	8.8×10^{-3} kg·m^2 or less	
Mass	Approx. 3.4 kg (rotor: 0.6 kg / stator: 2.8 kg) or less	
Compatible cables (types without relay connectors) Maximum cable length	CH23A-***NPFA 30 m	CH22-***NSFY 30 m
Compatible cables (types with relay connectors) Maximum cable length	CH23A-***NPKA + CH23A-***NPFA 30 m	CH22-***NSFF + CH22-***NSFY 30 m

Magnescale reserves the right to change product specifications without prior notice.

Details of model designation

Encoder

RS97-1024N□△■■

[N] Rotor inner diameter
180 mm

[□] Resolution

Type	Resolution
G	23 bit
J	25 bit

[△] Communication protocol

Type	NC manufacturer	Remarks
A	FANUC	α interface
Z	SIEMENS AG	DRIVE-CLiQ

[■■] Head cable length

Type	Head cable length
01	1 m
02	2 m
03	3 m

Cables

CH22-□□□○▽※#

[□□□] Cable length
Written by flush right, indication in "m" units, up to 30 m, 0.5 m pitch
(Example)

Type	Cable length
015	1.5 m
070	7 m
260	26 m

[○] Conduit specification

Type	Conduit specification
C	With conduit
N	Without conduit

[▽] Cable seath (covering)

Type	Cable specification
S	PU

[※] Encoder side connector : a

Type	Specification	Remarks
M	Encoder head connector	Standard
F	M12 connector (Female) made by Phoenix Contact	Relay/ Waterproofing

[#] Controller side connector : b

Type	Specification	Remarks
None	Open-end	
Y	RJ45 connector made by YAMAICHI ELECTRONICS	Adopts NC machine tool
Z	RJ45 connector (water proof) made by YAMAICHI ELECTRONICS	Relay
F	M12 connector (Male) made by Phoenix Contact	Relay/ Waterproofing

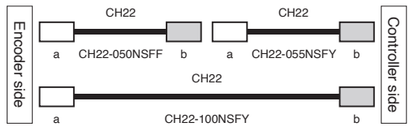

CH22-050NSFF
example)
Cable length 5 m
Without conduit
PU sheath
Encoder side connector
M12 (Female) made by Phoenix Contact
Controller side connector
M12 (Male) made by Phoenix Contact

CH22-100NSFY
example)
Cable length 10 m
Without conduit
PU sheath
Encoder side connector
M12 (Female) made by Phoenix Contact
Controller side connector
RJ45 made by YAMAICHI ELECTRONICS

CH22-055NSFY
example)
Cable length 5 m
Without conduit
PU sheath
Encoder side connector
M12 (Female) made by Phoenix Contact
Controller side connector
RJ45 made by YAMAICHI ELECTRONICS

CH23A-□□□○▽※#

[□□□]
Cable length
(Example)

Type	Cable length
010	1 m
005	0.5 m
065	6.5 m
100	10 m

[○] Conduit specification

Type	Conduit specification
C	With conduit
N	Without conduit

[▽] Cable sheath

Type	Cable specification
P	PVC (Φ8) [Controller side]
E	PU (Φ8) [Controller side]

[※] Controller side connector : b

Type	Specification	Remarks	
Z	Open-end	Encoder side connector should be 10P JN2 (Female) made by Japan Aviation Electronics Industry or 2P made by TAJIMI ELECTRONICS	
None			
F	10P made by 3M		Mitsubishi Electric NC, J3
J	20P straight case made by Honda Tsushin Kogyo		FANUC
K	Horizontal drawing case made by HIROSE Electric		FANUC
N	10P JN1 (Male) made by Japan Aviation Electronics Industry		Relay
	12P R04 (Male) made by TAJIMI ELECTRONICS		Relay (fixed)

[#] Encoder side connector : a

Type	Specification	Remarks
A	10P JN2 (Female) made by Japan Aviation Electronics Industry	Relay

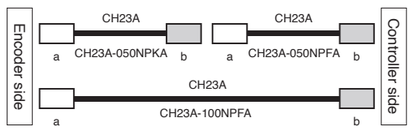

CH23A-050NPKA
example)
Cable length 5 m
Without conduit
PVC sheath (Φ8)
Encoder side connector
10P JN2 (Female) made by Japan Aviation Electronics Industry
Controller side connector
10P JN1 (Male) made by Japan Aviation Electronics Industry

CH23A-100NPFA
example)
Cable length 10 m
Without conduit
PVC sheath (Φ8)
Encoder side connector
10P JN2 (Female) made by Japan Aviation Electronics Industry
Controller side connector
20P made by Honda Tsushin Kogyo

CH23A-050NPFA
example)
Cable length 5 m
Without conduit
PVC sheath (Φ8)
Encoder side connector
10P JN2 (Female) made by Japan Aviation Electronics Industry
Controller side connector
20P made by Honda Tsushin Kogyo

Absolute angle encoder

Enclosed type

RU97-2048

- Magnetic system enables use even in environments with condensation, oil, and other adverse conditions
- Internal coupling allows for design and mounting flexibility

SIEMENS

Dimensions

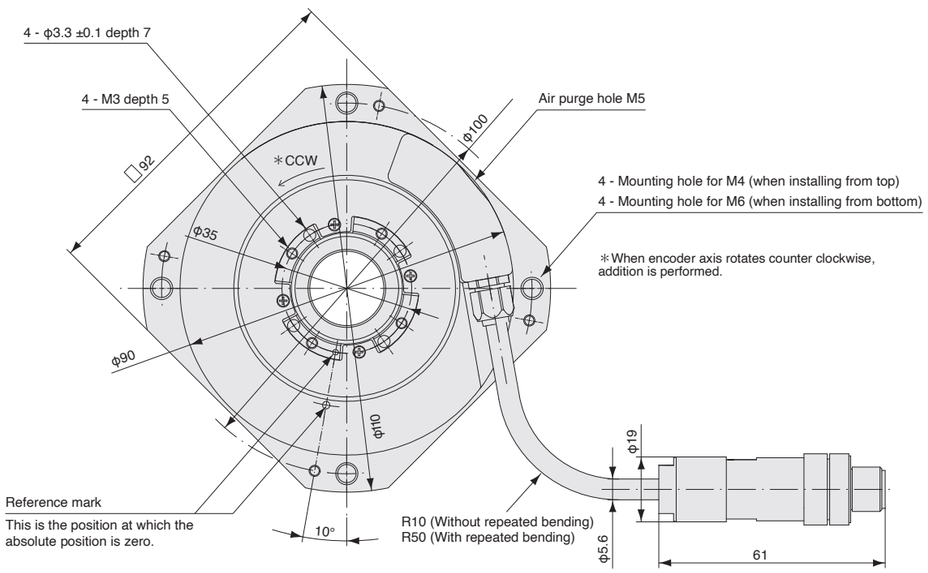

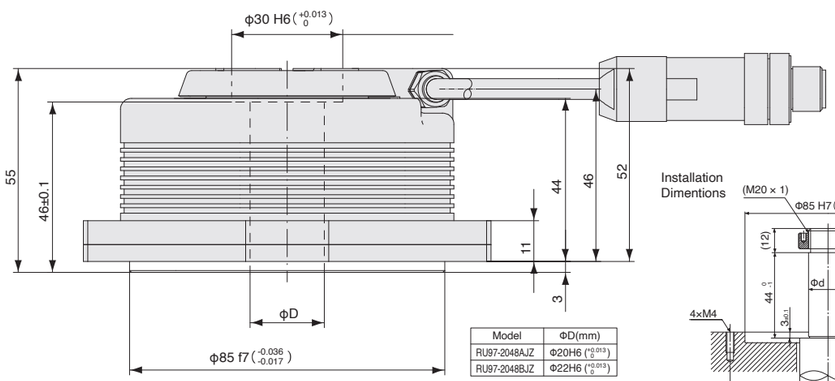

Model	ΦD(mm)
RU97-2048AJZ	Φ20H6 (+0.013 0)
RU97-2048BJZ	Φ22H6 (+0.013 0)

Installation Dimentions

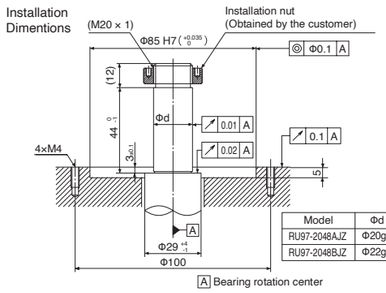

Model	Φd (mm)
RU97-2048AJZ	Φ20g6 (-0.007 -0.020)
RU97-2048BJZ	Φ22g6 (-0.007 -0.020)

Unit: mm

Specifications

Model name	RU97-2048AJZ■■ RU97-2048BJZ■■
Output wave number	2,048 waves/revolution
Through hole diameter	A：φ20 mm, B：φ22 mm
Accuracy (at 20°C)	±2.5"
Output signal	Compliant with DRIVE-CLiQ, single turn absolute type
Compatible controllers	SIEMENS AG
Resolution	25 bit (33,554,432 pulses/revolution)
Maximum response revolutions	2,000 min^{-1}
Maximum mechanical revolutions	3,000 min^{-1}
Functional safety	IEC 61508, EN/BS 62061 SIL 2 EN/BS/ISO 13849-1 Cat. 3 / PL d EN/BS 61800-5-2
Product Safety	FCC Part15 Subpart B Class A ICES-003 Class A Digital Device EN/BS 61000-6-2, EN/BS 61000-6-4
Product Environment	EN/BS 63000
Operating temperature	0 to +60°C
Storage temperature	-10 to +60°C
Vibration resistance	150 m/s^2 (50 Hz to 2,000 Hz)
Impact resistance	1,000 m/s^2 (11 ms)
Protective design grade	IP65
Power supply voltage	DC +17 to +30.8 V
Maximum consumption current	1.6 W or less (17 V or 30.8 V)
Consumption current	65 mA (with 24 V controller connection)
Moment of inertia	9.4×10^{-5} kg·m^2 or less
Starting torque (at 20°C)	0.08 N·m or less
Mass	Approx. 1.2 kg or less
Compatible cables (types without relay connectors) Maximum cable length	CH22-***NSFY 30 m
Compatible cables (types with relay connectors) Maximum cable length	CH22-***NSFF + CH22-***NSFY 30 m

Magnescale reserves the right to change product specifications without prior notice.

Details of model designation

Encoder

RU97-2048☆JZ■■

[☆]Drum inner diameter

Type	Drum inner diameter
A	Φ20 mm
B	Φ22 mm

[J]Resolution 25 bit

[Z]SIEMENS AG DRIVE-CLiQ

[■■]Head cable length

Type	Head cable length
01	1 m
02	2 m
03	3 m

Cables

CH22-□□□○▽※#

[□□□]Cable length
Written by flush right, indication in "m" units, up to 30 m, 0.5 m pitch
(Example)

Type	Cable length
015	1.5 m
070	7 m
260	26 m

[○]Conduit specification

Type	Conduit specification
C	With conduit
N	Without conduit

【▽】Cable seath (covering)

Type	Cable specification
S	PU

【※】Encoder side connector : a

Type	Specification	Remarks
M	Encoder head connector	Standard
F	M12 connector (Female) made by Phoenix Contact	Relay/ Waterproofing

【#】Controller side connector : b

Type	Specification	Remarks
None	Open-end	
Y	RJ45 connector made by YAMAICHI ELECTRONICS	Adopts NC machine tool
Z	RJ45 connector (water proof) made by YAMAICHI ELECTRONICS	Relay
F	M12 connector (Male) made by Phoenix Contact	Relay/ Waterproofing

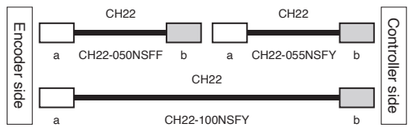

CH22-050NSFF
example）
Cable length 5 m
Without conduit
PU sheath
Encoder side connector
M12 (Female) made by Phoenix Contact
Controller side connector
M12 (Male) made by Phoenix Contact

CH22-100NSFY
example）
Cable length 10 m
Without conduit
PU sheath
Encoder side connector
M12 (Female) made by Phoenix Contact
Controller side connector
RJ45 made by YAMAICHI ELECTRONICS

CH22-055NSFY
example）
Cable length 5 m
Without conduit
PU sheath
Encoder side connector
M12 (Female) made by Phoenix Contact
Controller side connector
RJ45 made by YAMAICHI ELECTRONICS

Absolute angle encoder

Enclosed type

RU77-4096

- Space saving can be achieved with a thickness of up to 42 mm.
- Magnetic system enables use even in environments with condensation, oil, and other adverse conditions
- Internal coupling allows for design and mounting flexibility

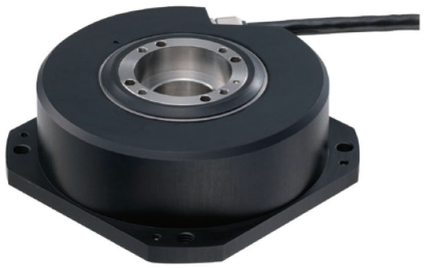

FANUC | Mitsubishi Electric | YASKAWA Electric

Dimensions

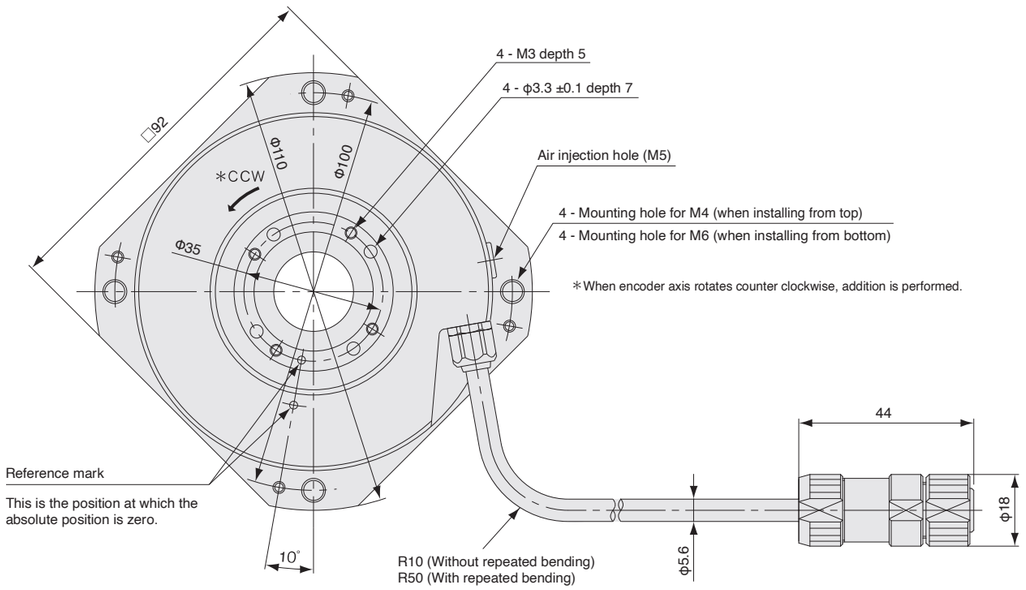

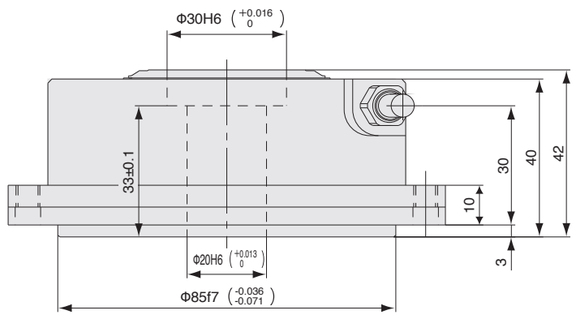

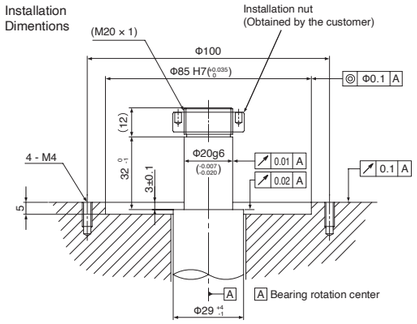

Unit : mm

Specifications

Model name	RU77-4096A□A★○○	RU77-4096A□B★○○ RU77-4096A□D★○○	RU77-4096A□F★○○
Output wave number	4,096 waves/revolution		
Through hole diameter	φ20 mm		
Accuracy (at 20°C)	±2.5"		
Output signal	Absolute serial bidirectional signal, compliant with EIA-485		
Compatible controllers	FANUC	Mitsubishi Electric	YASKAWA Electric
Maximum resolution	25 bit (33,554,432 pulses/revolution)		21 bit (2,097,152 pulses/revolution)
Maximum response revolutions	2,000 min^{-1}		
Maximum mechanical revolutions	3,000 min^{-1}		
Product Safety	FCC Part15 Subpart B Class A ICES-003 Class A Digital Device EN/BS 61000-6-2, EN/BS 61000-6-4		
Product Environment	EN/BS 63000		
Operating temperature	0 to +60°C		
Storage temperature	-10 to +60°C		
Vibration resistance	150 m/s^2 (50 Hz to 2,000 Hz)		
Impact resistance	1,000 m/s^2 (11 ms)		
Protective design grade	IP65		
Power supply voltage	DC +4.75 to +5.25 V (with connectiong terminal)		
Consumption current	200 mA (at 120Ω termination)		
Moment of inertia	9.4×10^{-5} $kg{\cdot}m^2$ or less		
Starting torque (at 20°C)	0.1 N·m or less		
Mass	Approx. 1.2 kg or less		
Standard compatible cable	CH33A-***, CE28A-***	CH33-***, CE28-***	
Maximum cable length	CH33A-*** : 30 m, CE28A-*** : 15 m	CH33-*** : 30 m, CE28*** : 15 m	

Magnescale reserves the right to change product specifications without prior notice.

Details of model designation

Encoder

RU77-4096A□△★○○

【□】Resolution

Type	Resolution	Number of pulses/revolution	Number of partitions
A	Approx. 2.5°/1,000	131,072	1/32
B	Approx. 1°/1,000	262,144	1/64
C	Approx. 7°/10,000	524,288	1/128
D	Approx. 3.5°/10,000	1,048,576	1/256
E	Approx. 2°/10,000	2,097,152	1/512
F	Approx. 1°/10,000	4,194,304	1/1,024
G	Approx. 4.5°/100,000	8,388,608	1/2,048
H	Approx. 2°/100,000	16,777,216	1/4,096
J	Approx. 1°/100,000	33,554,432	1/8,192

*YASKAWA Electric: D,F only

【△】Communication protocol

Type	Number of wires	NC manufacturer
A	Full duplex	FANUC ainterface
B	Half duplex	Mitsubishi Electric
D	Full duplex	Mitsubishi Electric
F	Half duplex	YASKAWA Electric

【○○】Cable length

Type	Cable length
03	0.3 m
05	0.5 m
10	1 m
15	1.5 m
20	2 m
25	2.5 m
30	3 m
40	4 m
50	5 m
60	6 m
70	7 m
80	8 m
90	9 m

【★】Connector

Connector	Description	Remarks
Metal water proofing	G	main cable length Max.9 m. extension cable : CE28 / CE28A *Max cable length (main + extension) : 15 m
Plastic water proofing	J	main cable length Max.1 m, extension cable : CH33 / CH33A *Max cable length (main + extension) : 30 m

Cable

CH33-□□○▽※#

CH33A-□□○▽※#

(CH33A : FANUC model only)

【□□】Cable length
Written by flush right, indication in "m" units, up to 30 m, 1 m pitch

(Example)

Type	Cable length
07	7 m
26	26 m

【○】Conduit

Type	Conduit
C	With conduit
N	Without conduit

【▽】Cable seath (covering)

Type	
P	PVC
E	PU

【※】Controller side connector : b

Type	Specification	Remarks
None	Open-end	Standard
M	10P made by 3M	Mitsubishi Electric NC, J3, J4
F	20P straight case made by Honda Tsushin Kogyo	FANUC
G	6P made by Molex Japan LLC	YASKAWA Electric
J	Horizontal drawing case made by HIROSE Electric	FANUC
K	10P JN1 (Male) made by Japan Aviation Electronics Industry	Relay

【#】Encoder side connector : a

Type	Specification	Remarks
A	10P JN2 (Female) made by Japan Aviation Electronics Industry	Relay

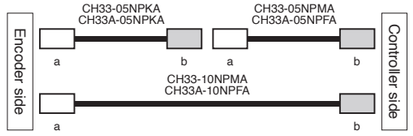

CH33-05NPKA
CH33A-05NPKA
example)
Cable length 5 m
Without conduit
Controller side connector
10P (JN1) made by Japan Aviation Electronic Industry
Encoder side connector
JN2DS10SL2-R made by Japan Aviation Electronics Industry

CH33-10NPMA
Ch33A-10NPFA
example)
Cable length 10 m
Without conduit
Controller side connector
<CH33> 10P made by 3M
<CH33A> 20P made by Honda Tsushin Kogyo
Encoder side connector
JN2DS10SL2-R made by Japan Aviation Electronics Industry

CH33-05NPMA
CH33A-05NPFA
example)
Cable length 5 m
Without conduit
Controller side connector
<CH33> 10P made by 3M
<CH33A> 20P made by Honda Tsushin Kogyo
Encoder side connector
JN2DS10SL2-R made by Japan Aviation Electronics Industry

CE28-□□□○※

CE28A-□□□○※

(CE28A : FANUC model only)

【□□□】Cable length
Written by flush right, indication in "10cm" units, up to 14m,1m pitch

(Example)

Type	Cable length
070	7 m
090	9 m
130	13 m

【○】Conduit

Type	Conduit
C	With conduit
N	Without conduit

【※】Controller side connector : b

Type	Specification	Remarks
None	Open-end	Standard
M	10P made by 3M	Mitsubishi Electric NC, J3, J4
F	20P made by Honda Tsushin Kogyo	FANUC
G	6P made by Molex Japan LLC	YASKAWA Electric
J	10P (JB1) made by Japan Aviation Electronics Industry	RU77 cable extention
K	10P (JN1) made by Japan Aviation Electronics Industry	RU77 cable extention

Incremental angle encoder

Enclosed type

RU74

- Space saving can be achieved with a thickness of up to 42 mm.
- Magnetic system enables use even in environments with condensation, oil, and other adverse conditions
- Internal coupling allows for design and mounting flexibility

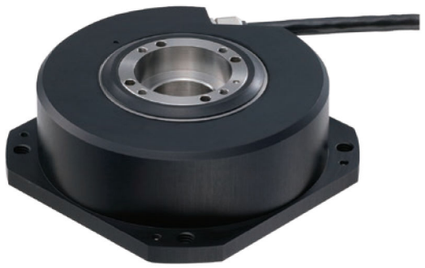

A/B/Refelence point

Dimensions

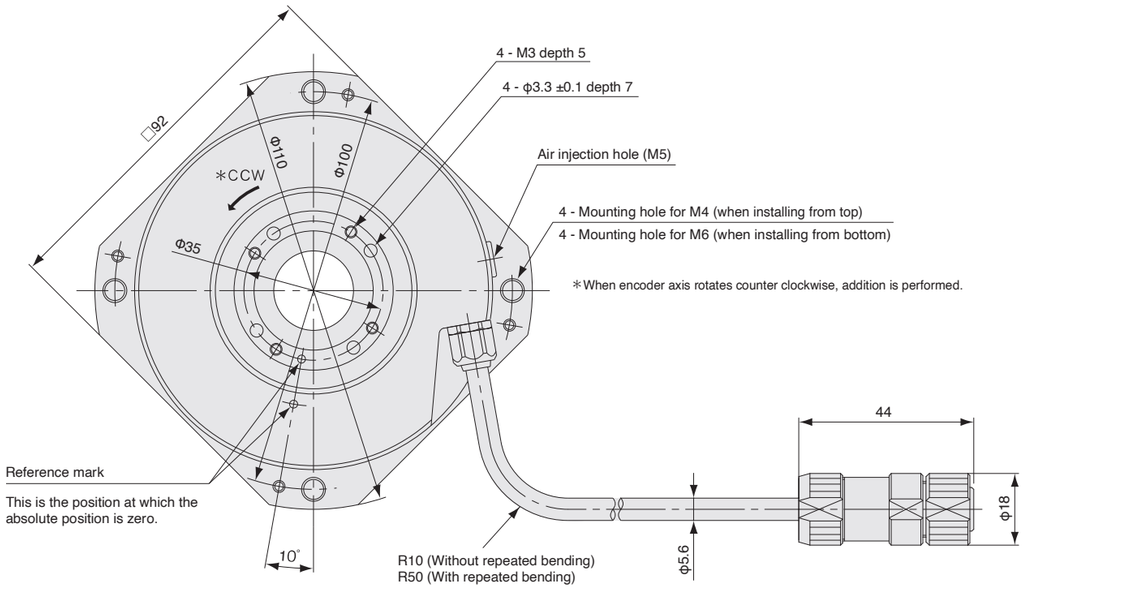

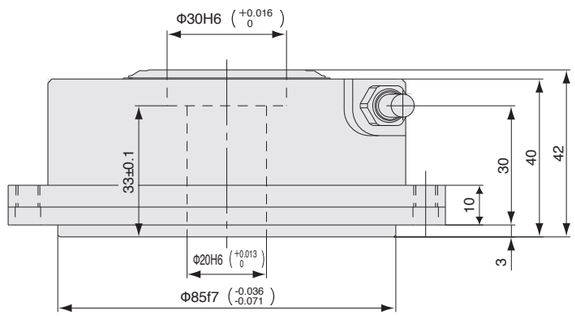

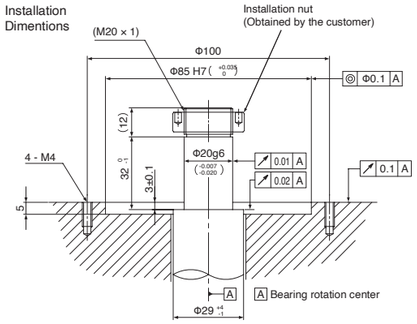

Unit: mm

Specifications

Model name	RU74-4096AA◆G○○ RU74-4096AB◆G○○	RU74-4096AC◆G○○ RU74-4096AD◆G○○
Output wave number	4,096 waves/revolution	
Through hole diameter	φ20 mm	
Accuracy (at 20°C)	±2.5"	
Output signal	A/B/Reference point, line driver signal, compliant with EIA-422	
Compatible controllers	Controller of each company (connected to A/B quadrature and reference point signal receiver)	
Maximum resolution	Approx.1/1,000°	Approx.1/10,000°
Maximum response revolutions	2,000 min^{-1}	267 min^{-1}
Maximum mechanical revolutions	3,000 min^{-1}	
Product Safety	FCC Part15 Subpart B Class A ICES-003 Class A Digital Device EN/BS 61000-6-2, EN/BS 61000-6-4	
Product Environment	EN/BS 63000	
Operating temperature	0 to +60 °C	
Storage temperature	-10 to +60 °C	
Vibration resistance	150 m/s^2 (50 Hz to 2,000 Hz)	
Impact resistance	1,000 m/s^2 (11 ms)	
Protective design grade	IP65	
Power supply voltage	DC +4.75 to +5.25 V (with connectiong terminal)	
Consumption current	200mA (at 120Ω termination)	
Moment of inertia	9.4×10^{-5} kg·m^2 or less	
Starting torque (at 20°C)	0.1 N·m or less	
Mass	Approx. 1.2kg or less	
Standard compatible cable	CE28-***	
Maximum cable length	CE28-*** : 15 m	

Magnescale reserves the right to change product specifications without prior notice.

Details of model designation

Encoder

RU74-4096A□◆G○○

[□]Resolution, direction of rotation, and polarity

Type	Resolution	Direction of rotation / Direction	Number of pulses/revolution	Number of divisions
A	Approx. 1°/1,000	CW / +	360,448	88
B	Approx. 1°/1,000	CCW / +	360,448	88
C	Approx. 1°/10,000	CW / +	3,600,384	879
D	Approx. 1°/10,000	CCW / +	3,600,384	879

[◆]Minimum phase difference

Type	Minimum phase difference	Response revolutions (min)		Type	Minimum phase difference	Response revolutions (min)
		Approx.1°/1,000	Approx.1°/10,000			Approx.1°/1,000
A	50	2,000	267	H	500	266
B	100	1,332	133	J	650	205
C	150	888	89	K	1,000	133
D	200	666	67			
E	250	533				
F	300	444				
G	400	333				

[G]Connector Metal water proofing (JB1)

[○○]Cable length

Type	Cable length
03	0.3 m
05	0.5 m
10	1 m
15	1.5 m
20	2 m
25	2.5 m
30	3 m
40	4 m
50	5 m
60	6 m
70	7 m
80	8 m
90	9 m

Cables

CE28-□□□○※

[□□□]Cable length
Written by flush right, indication in "10 cm" units, up to 14 m,1 m pitch
(Example)

Type	Cable length
070	7 m
090	9 m
130	13 m

[○]Conduit

Type	Conduit
C	With conduit
N	Without conduit

[※]Controller side connector

Specification	Remarks	Type	
Earth wire		Without	With
Open-end	Standard	None	—
10P made by 3M	Mitsubishi Electric NC, J3	L	—
20P made by Honda Tsushin Kogyo	FANUC	E	P
10P (JB1) made by Japan Aviation Electronics Industry	RU7* extension cable	J	—

Accessories

Signal Diagnostic Tool

AC20-B100

・Observation of encoder internal conditions using dedicated software (MGS Monitoring System)

・Encoder signals (Lissajous waveforms), clearances, and failure diagnostics can be checked.

・Encoder status can be checked even without power supply from the equipment.

・Encoder installation and adjustment can be performed while checking the signal status.

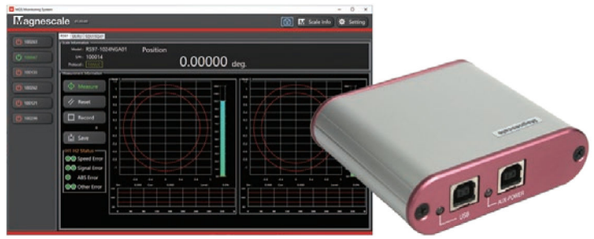

■Specialized software (screen image when connected to SQ47 and SQ57)

■ Specifications

Model name	AC20-B100
Connection with the computer	USB 2.0 Full Speed
Mass	150 g
Dimensions	82 (W) × 75 (D) × 24 (H) mm

A USB 2.0 compatible hub is required when using a USB 3.0 port

■ Compatible encoder

Linear encoder	SQ57, SQ47, SR27A, SR67A
Angle encoder	RS97, RU97, RU77

Special cable is required. Contact our sales representative.

■Operating environment

CPU	Intel Core i3 or higher is recommended*
RAM	1 GB or higher is recommended*
OS	Windows 7 (32 bit / 64 bit editions) Windows 8 (32 bit / 64 bit editions) Windows 10 (32 bit / 64 bit editions)
Display	1,280 × 800 pixels or higher is recommended*

* It must satisfy the required specification of OS.

Mounting Tools

SZ23

Gap verification spacer

■Applicable models
SR24
SR27A

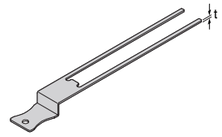

SZ23	t
For mounting	1.0 mm
For maximum gap verification	1.2 mm
For minimum gap verification	0.8 mm

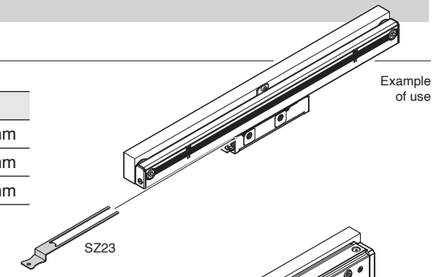

SZ24

Gap verification spacer

■Applicable models
SR67A

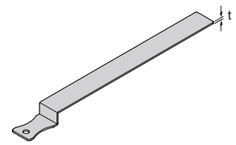

SZ24	t
For mounting	1.0 mm
For maximum gap verification	1.2 mm
For minimum gap verification	0.8 mm

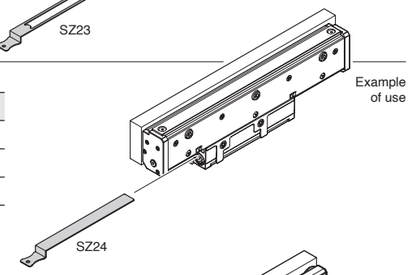

SZ25

Gap verification spacer

■Applicable models
SR24
SR27A
SR67A

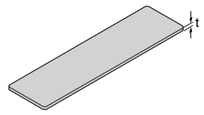

SZ25	t
For mounting	1.0 mm
For maximum gap verification	1.2 mm
For minimum gap verification	0.8 mm
For height verification	0.2 mm

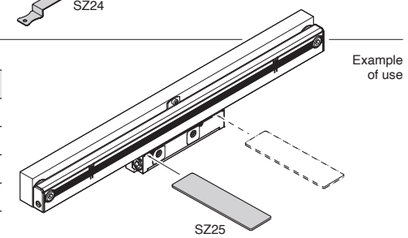

SZ26

Clearance adjustment spacer

■Applicable models
SQ47

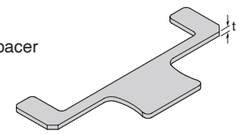

SZ26	t
—	2.0 mm

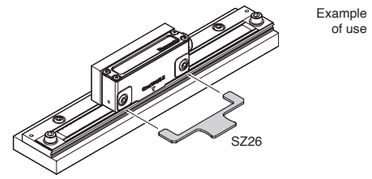

SZ27

Track positioning spacer

■Applicable models
SQ57

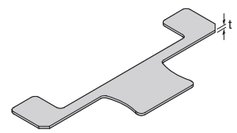

SZ27	t
For center value verification	1.0 mm
For lower limit verification	0.8 mm
For upper limit verification	1.2 mm

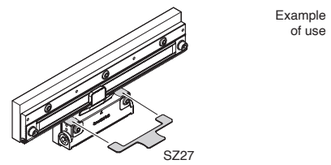

SZ28

Track positioning spacer

■Applicable models
SQ57

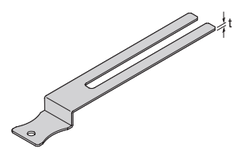

SZ28	t
For center value verification	1.0 mm
For lower limit verification	0.8 mm
For upper limit verification	1.2 mm

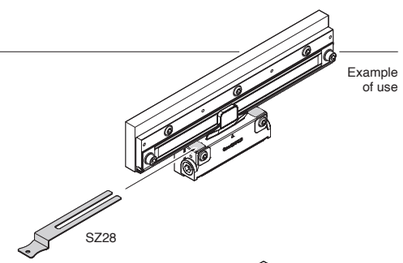

SZ29

Clearance adjustment spacer

■Applicable models
SQ57

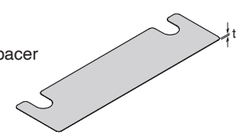

SZ29	t
—	0.05 mm
—	0.1 mm
—	0.2 mm

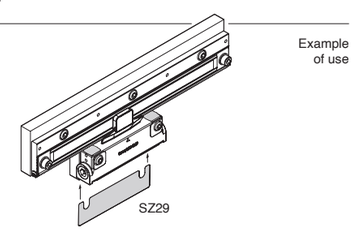

Technology

Air purging

If encoder is used in a dusty or misty environment, it is recommended that air is introduced into the encoder to alleviate any unwanted effects. Attach air nipples to M5 holes for air introduction that are provided at both ends of the encoder to supply air into the encoder. When introducing air into the encoder, supply air via an air filter (nominal filtration rating: 5 µm), mist separator (nominal filtration rating: 0.3 µm), and a regulator to remove dust, dirt, and mist. As a guide, the amount of air supplied to the encoder is 10 - 20 ℓ/min.
(Supported models : SR27A, SR67A, SR24)

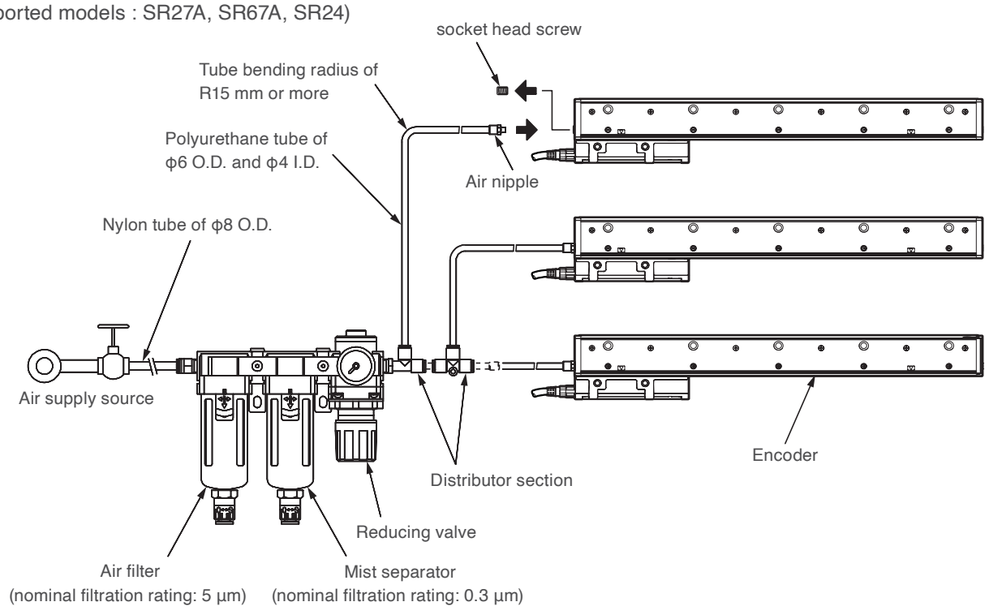

Traceability

Traceability Flow Chart (Length)

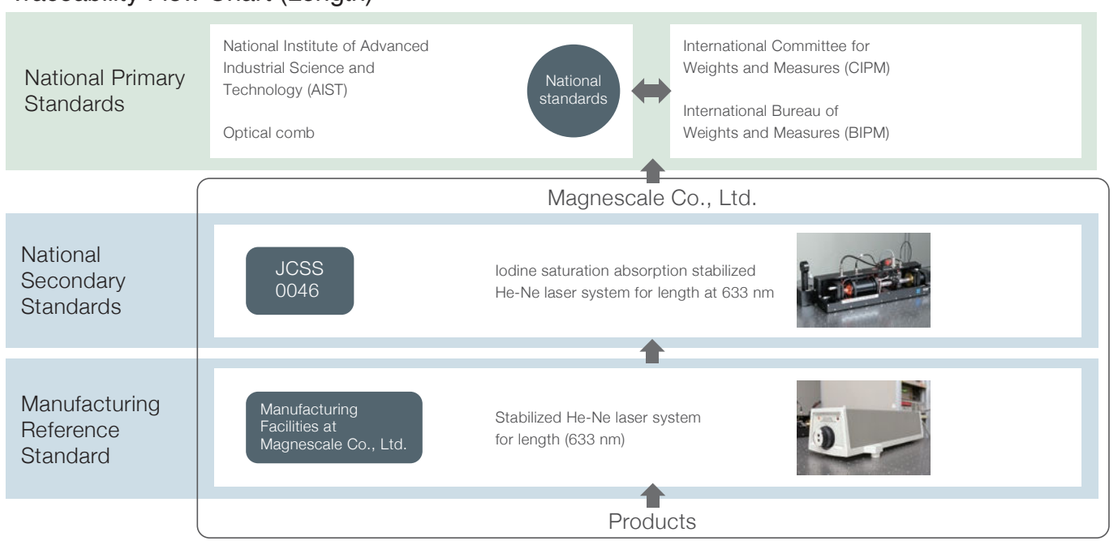

Quality

No compromise for high-accuracy products

The total quality control system that operates throughout the entire design and production process ensures products with enhanced safety, high quality, and high reliability that match our customers' requirements. The company is certified for length calibration in compliance with the traceability system required by the "Weights and Measures Act," and has been granted ISO 9001 certification, which is the international standard for quality assurance. In addition, we have introduced the highest level EMC (Electromagnetic Compatibility) testing equipment to address the noise problem that is becoming increasingly regulated around the world, and we are taking all possible measures to control quality.

Our products comply with CE/UKCA requirements, have acquired UL certifications and meet other international standards and regulations.

We have met:
- CE/UKCA Marking (EMC Directives) EMI : EN/BS 61000-6-4, EMS : EN/BS 61000-6-2
- CE/UKCA Marking (RoHS Directives) EN/BS 63000
- FCC regulation FCC Part 15 Subpart B Class A
- ICES regulation ICES-003 Class A

for Products with built-in AC power supply:
- UL/cUL 61010-1 • EN/BS 61010-1

for Products with Laser:
- DHHS (21CFR1040.10) • EN/BS 60825-1 • JIS C 6802

• Safety of Machinery - If the product is used in equipment subject to conformity to the electrical equipment of machinery (EN60204-1), please take measures to ensure conformity to that standard before use.
* Please note that some products may have different standards or may not have been certified in all areas, so please check with our sales department before purchasing.

Functional Safety

Recently, great importance has been placed on human safety around industrial machines and machine tools. In 2010, the European Machinery Directive mandated compliance with functional safety for electrical equipment used in the safety systems of machines subject to the Machinery Directory. These safety demands are anticipated to spread across many additional regions and industries in the future. Magnescale leads the competition with its lineup of feedback scale that have acquired third-party functional safety certification in order to meet global demands for safety.

Certification standards	IEC 61508, EN/BS 62061 SIL 2 EN/BS/ISO 13849-1 Cat. 3 / PL d EN/BS 61800-5-2
Models that have acquired certification	• Angle encoders RS97-1024EGZ series RS97-1024NGZ series RU97-2048 Z series • Linear encoders SQ57-Z series SQ47-Z series SR27A-AZ series SR67A-AZ series

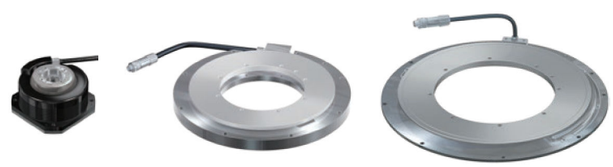

* Consult our sales representative for details.